VOL. 15 NOTES FROM THE SHOP NO. 90

Woodsmith®

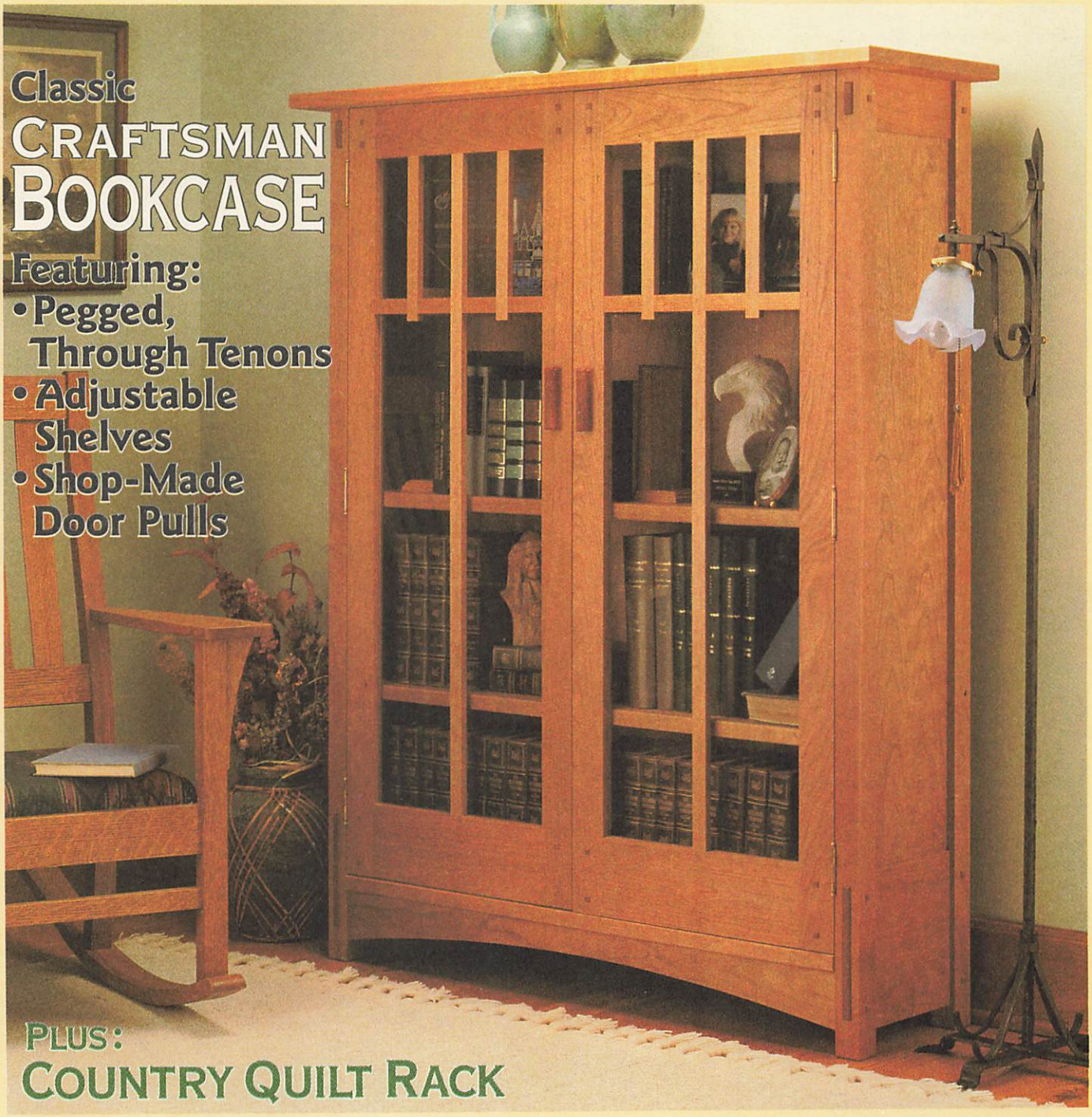

Classic CRAFTSMAN BOOKCASE

Featuring:
- Pegged, Through Tenons
- Adjustable Shelves
- Shop-Made Door Pulls

PLUS:
COUNTRY QUILT RACK

No. 90 December, 1993

Woodsmith®

Editor Donald B. Peschke
Managing Editor Douglas L. Hicks
Assistant Editors James M. Dolan, Philip A. Totten, Jonathan Garbison

Creative Director Ted Kralicek
Art Director Rod Stoakes
Senior Illustrators David Kreyling, Cinda Shambaugh
Illustrators Dirk Ver Steeg, Mark Higdon
Photographer Crayola England
Electronic Graphics Chris Glowacki
Design Director Ken Munkel
Senior Designers Jan Hale Svec, Kent Welsh
Shop Manager Steve Curtis
Shop Asst./Facilities Steve Johnson

Circulation Director Liz Bredeson
Subscription Manager Sandy Baum
Circulation Analyst Rod Cain
Newsstand Sales Kent A. Buckton

PUBLISHING SERVICES

Assoc. Editor: Gordon Gaippe • *Sr. Graphic Artist:* Robert H. Whitmer • *Graphic Artist:* Cheryl L. Cynor

CORPORATE SERVICES

Controller: Robin Hutchinson • *Accounting:* Laura Thomas • *Bookkeep.:* Julie Greenlee • *Info. Serv. Mgr.:* Joyce Moore • *Elect. Pub. Coord.:* Douglas M. Lidster • *Applic. Specialist:* Linda Morrow • *Admin. Assist.:* Cheryl A. Scott, Julia Fish • *Recept.:* Jeanne Johnson • *Build. Maint.:* Ken Griffith, Archie Krause

WOODSMITH MAIL ORDER

Marketing Dir.: Robert Murry • *Art Dir.:* Cindy Jackson • *Catalog Products Mgr.:* Bob Baker • *Project Supplies:* Linda Jones • *Technical Support:* Jeff Janes

CUSTOMER SERVICE

Manager: Valerie Wiese • *Supervisor:* Jennie Enos
Customer Service Representatives: Jennifer Murphy, Joy Johnson, Sara Kono, Ami Blanshan, Anna Cox, Chris Lo, Stephanie Hagen, Kristi Andrews

SHIPPING DEPARTMENT

Supervisor: Jerry Carson • *Fulfillment:* Gloria Sheehan, Donnie McVey, Chuck Carlson, Sylvia Carey

WOODSMITH STORE

Manager: Dave Larson • *Assistant Manager:* Paul Schneider • *Sales Staff:* Wendell Stone, Dominic Bazzocco • *Office Manager:* Vicki Edwards

Woodsmith® (ISSN 0164-4114) is published bimonthly (Feb., Apr., June, Aug., Oct., Dec.) by Woodsmith Corp., 2200 Grand, Des Moines, IA 50312.
Woodsmith® is a registered trademark of Woodsmith Corp. Copyright© 1993 Woodsmith Corporation. All rights reserved.
Subscriptions: Single copy: $3.95. One year subscription (6 issues), $19.95. Two years (12 issues), $35.95. (Canada/Foreign add $5 per year, U.S. funds.)
Second Class Postage Paid at Des Moines, IA and at additional offices.
Postmaster: Send change of address to *Woodsmith*, Box 10718, Des Moines, IA 50350.
Subscription Questions? Call **1-800-333-5075**, 8:00 am to 5:00 pm, Central Time, weekdays.

PRINTED IN U.S.A.

EDITOR'S COLUMN

Sawdust

Which comes first, the mortise or the tenon? That's the friendly "chicken or egg" debate that's been going on around here the last couple weeks.

I've always argued that you should cut the mortise first on a mortise and tenon joint. Then cut the tenon to fit the mortise.

It seems to me it's easier to shave a tenon smaller than it is to chop a mortise larger. (It's hard to see what you're doing inside a dark mortise.)

Okay, that's my philosophy. And it's pretty much what we're showing in the article on how to make a through mortise and tenon joint starting on page 13.

BOOKCASE. But back to the debate — here's how it started. I wanted to build a Craftsman-style Bookcase. It's an opportunity to use through mortise and tenon joints. But Ken, our design director, and Steve, our shop manager, convinced me that for this project the tenons should be cut first.

Their reasoning makes sense. The sides of the Bookcase are frame and panel units. First, there's a groove that's cut in the frame pieces to hold the panel. Then the tenons are cut to fit the grooves. Finally the mortises are cut to fit the tenons.

It's logical to start with the tenons. But it goes against my "mortise first" philosophy.

ANOTHER JIG. This method seemed the easiest way to approach cutting the joint. But Ken wanted to make it even easier. So he came up with a jig that can be used to cut a clean, through mortise to match a tenon perfectly.

The whole idea behind the jig is to adjust it so it fits like a saddle over the tenon. Then the jig can be slipped off and used to lay out and cut the matching mortise.

It's kind of an "inside-out" approach to cutting a mortise and tenon joint. And it's all perfectly logical. But it still goes against my basic "mortise first" philosophy. The debate continues.

A NEW INDEX

We haven't printed an index to the back issues of *Woodsmith* in almost two years. And readers haven't been shy about reminding me of that fact. So we decided to update and completely rework the index. But this time we did an even more thorough job. We're printing the index in a 48-page booklet and calling it *Projects, Plans, & Techniques*.

Not only does it include an index to every project and article in all the back issues of *Woodsmith* (Nos. 1 to 89). But also every back issue of our other magazine, *ShopNotes* (Nos. 1 to 11). There are even descriptions of the hardware kits available to build the projects. And the booklet's free.

To receive a copy of *Projects, Plans, & Techniques*, mail in the card that's bound in this issue. If the card is missing, you can get a copy by writing to: *Woodsmith*, P.O. Box 842, Des Moines, IA 50304-9961. (Please allow 6 to 8 weeks for delivery.)

SOME NEW FACES

We've had a slight population explosion around here lately. Robin Hutchinson has joined us as financial controller. Mark Higdon has joined the *Woodsmith* team as an illustrator. Cheryl Cynor is a new graphic artist for our Publishing Services department.

Steve Johnson has moved from his position with The Woodsmith Store to become our assistant shop and facilities manager. Taking Steve's place at the store is Paul Schneider who formerly worked for Shopsmith. Finally, Stephanie Hagen and Kristi Andrews have become full-time customer service representatives.

Not only has the number of employees grown, but the *Woodsmith* extended family has also grown. First, Jon and Ladonna Garbison had a baby boy (Jake). Then Bob and Deb Whitmer also had a boy (Ryan). And most recently, my administrative assistant, Julia Fish, and her husband, Dave, had a girl (Anna). Julia assures me she'll be back soon (real soon, I hope).

But if you really want to hear a story, ask Jeanne Johnson, our receptionist, about her new grandson, Jacob. (No one gets as excited as a first-time grandma.)

All this talk about babies. Hmm . . . it gets me thinking again about that chicken or egg debate.

Don

A LOOK INSIDE

Contents

Tips & Techniques 4 *From our readers: two pages of great ideas for solving common woodworking problems.*

Quilt Rack 6 *A spring-loaded rod removes easily for wrinkle-free hanging of a quilt. And a shelf holds plates in a groove.*

Through Mortise Jig 10 *Sometimes it's best to cut a through mortise and tenon joint "inside out." A special jig solves the problem of cutting the mortise to fit the tenon perfectly.*

Through Mortise Joint 13 *A through mortise and tenon joint is strong, and looks good too. Here are the steps for cutting both parts of the joint.*

Shop Notes 16 *While building the projects in this issue, we came up with a few tips and techniques of our own.*

Smoothing Panels 18 *Here's a method for smoothing panels using two common tools: a hand scraper and a belt sander. Plus, some belt sanding tips.*

Craftsman Bookcase 20 *Like many Craftsman-style pieces, this Bookcase has clean, simple lines with decorative joinery. It's also built in the Craftsman tradition, requiring both machine tools and handwork.*

Sources 31 *Hardware and supplies needed for the projects in this issue.*

Quilt Rack *page 6*

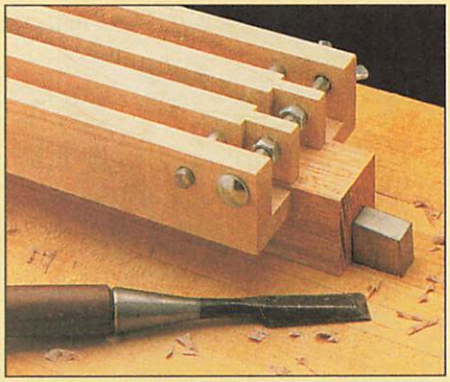

Through Mortise Jig *page 10*

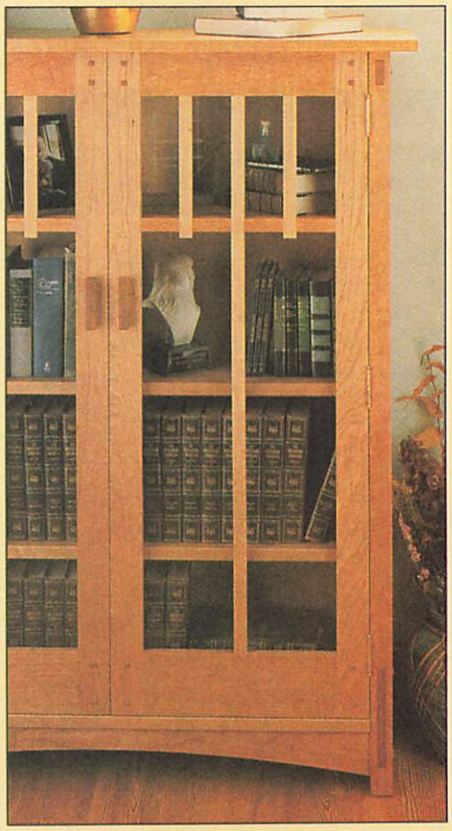

Craftsman Bookcase *page 20*

Tips & Techniques

MITER GAUGE SET-UP BOARD

■ Setting a miter gauge to exactly 90° is a bit of a hassle. To speed up the process and still ensure accuracy, I made a miter gauge set-up board.

The set-up board consists of a base and a backing board, see Fig. 1. (For dimensional stability, I used ¾"-thick plywood for both parts.)

To make the set-up board, first cut a groove down the center of the base to fit the bar on your miter gauge. (The bar should slide freely — but without slop.)

Next, drill and screw the backing board to the base, placing it *exactly* 90° to the groove, see Fig. 1. (While you're at it, drill a hole near the top so the board can be hung on the wall.)

With the miter gauge unlocked, first slide it into the groove, up against the backing board, see Fig. 2. Then lock the miter gauge in place.

Bob Parker
Chilliwack, British Columbia

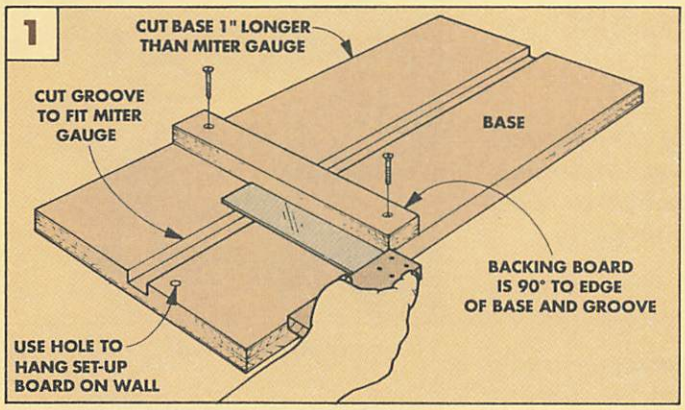

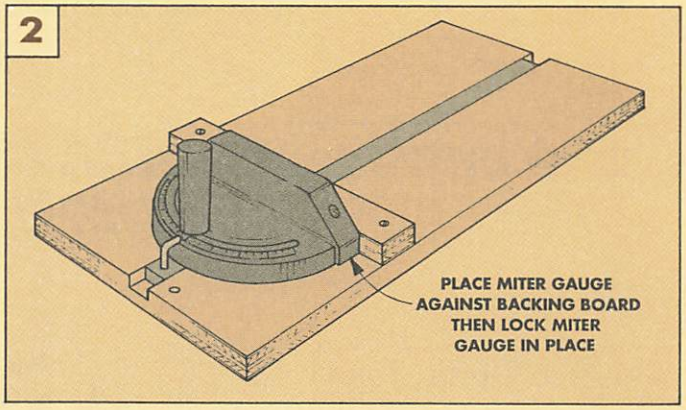

TEMPORARY WORK TABLE

■ With a small shop, I often need an extra work surface for assembly or finishing. So to get it, I make a temporary work table out of four pipe clamps and ¾"-thick plywood, see drawing.

The nice thing about this table is it can be set up and broken down in no time at all. And it takes up very little space when stored. Also, when setting up the table on an uneven floor, the clamps allow me to make slight leveling adjustments.

Peter N. Williams
Corpus Christi, Texas

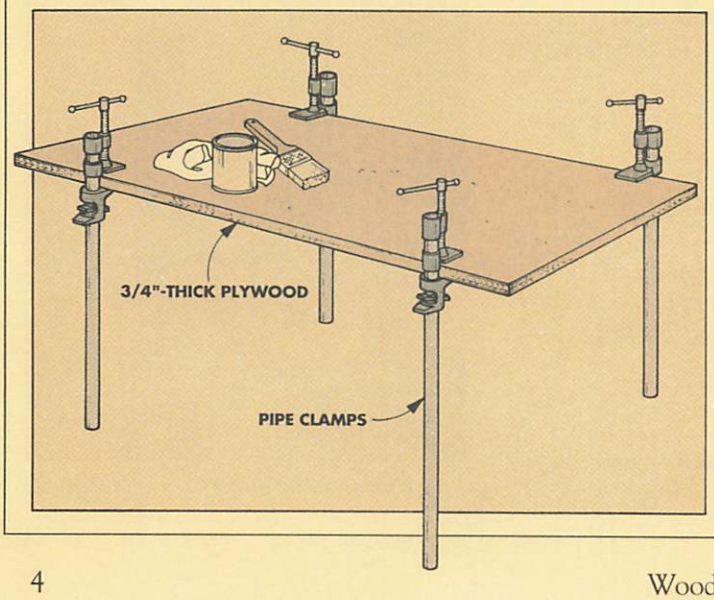

FLEXIBLE CURVE

■ Every once in a while I need to lay out a curve or duplicate an existing one. The best tool I've found for this is a flexible curve. But instead of buying one, I made my own by sliding a length of plumber's solder into a piece of vinyl tubing, see drawing.

To make it easier to insert the solder, the inside diameter of the tubing must be slightly larger than the diameter of the solder. Also, it helps to soak the tubing in hot soapy water before sliding in the solder.

I made my flexible curve about 18" long. Any longer and it becomes difficult to slide the solder into the tubing.

Winston Plummer
Tampa, Florida

Editor's Note: When we tried Winston's tip, it worked great! Locally, a two foot length of ¼"-dia. vinyl tubing (commonly used for aquarium pumps) cost 30¢. And a four ounce roll of plumber's solder cost $2.

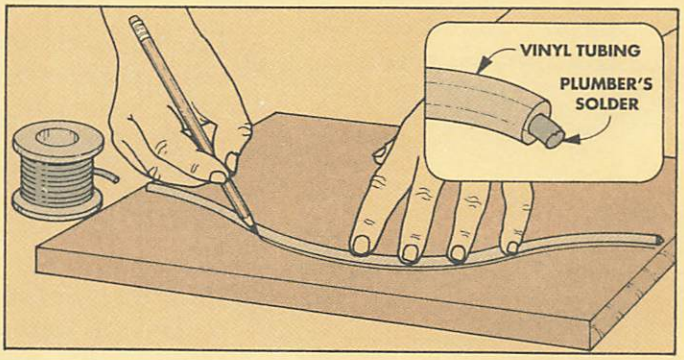

RIB FILLERS

■ Occasionally I clamp a jig or featherboard to the top of my table saw, see drawing. But sometimes the support ribs on the underside of the saw make it hard to position the clamps. To solve this, I put a little "meat on my ribs" — I glued filler blocks to the underside of the top, see detail.

The key here is to make the filler blocks the same height as the ribs. This way, the bottom of the table is perfectly flat.

After the blocks are cut to fit between the ribs, glue and clamp them in place. (I used contact cement so the blocks could be removed later if necessary.)

Mark Palmer
Richland, Washington

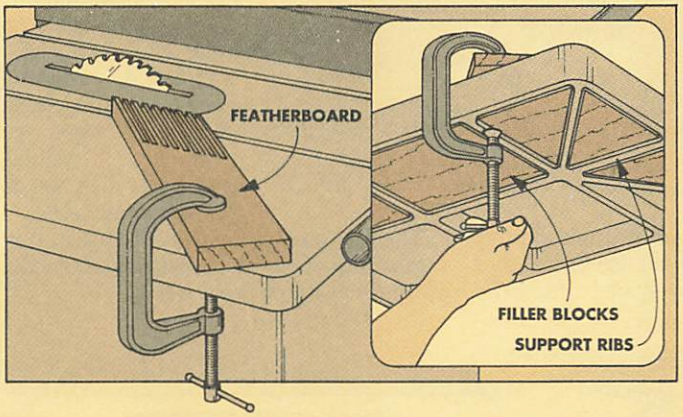

REFERENCE BOARD

■ I stain quite a few of my projects. Needless to say, I have many containers of stain in my shop. To keep track of them all, I make some reference boards to help me "catalog" how each stain looks when applied to different woods.

The reference boards are cut from the woods I use most often. On each board, I section off a number of individual areas by cutting shallow kerfs with the table saw, see photo.

Next, I apply each stain between the kerfs, being careful to mark the back of the board with the name of the stain or any special finishing instructions. (Once the stain dries, I even go so far as to apply the finish coat over the stain sample.)

Now when I want a new project to match the finish on a prevvious project, I just refer to the reference boards.

John Radewahn
Milwaukee, Wisconsin

BANDSAWING PLUGS

■ I like to make my own plugs with a plug cutter. To get them to a uniform length, I cut them on the band saw, refer to Fig. 2.

But occasionally when bandsawing, they pop out and get lost on the floor of the shop. To avoid this, I keep the plugs in place by applying masking tape before cutting them to length.

First, drill the plugs with the plug cutter, see Fig. 1. Then place a strip of masking tape over the plugs.

Once they've been cut to length, peel off the tape, see Fig. 2. The plugs will stick to the tape, not bounce around the floor.

Lawless J. Dupre
Eunice, Louisiana

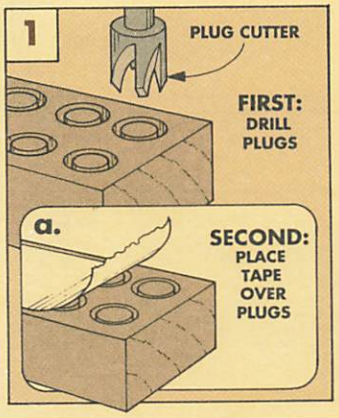

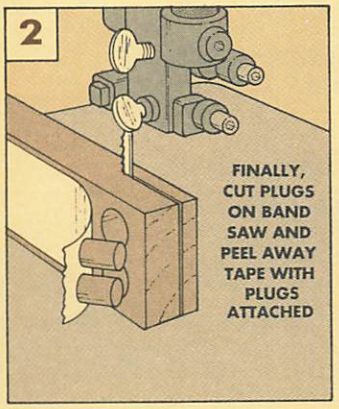

SHOP-MADE SIZING

■ In *Woodsmith* No. 87, you recommended staining the Model Fire Truck with aniline dye. But when using dyes on woods with "wild grain" (like maple, birch, and pine), the stain can blotch. A while back, I came across a technique that helps reduce blotching.

Before dying wood that might be a problem, I seal it with shop-made sizing liquid. (Sizing is a thin, pasty liquid used as a filler. It seals up end grain that's exposed on the face of a board.)

The sizing I use consists of four parts water and one part yellow woodworker's glue. After mixing the solution together, brush on one coat.

Since the sizing liquid is a water-based solution, the grain will raise. So after it dries, lightly sand the raised grain with 220 grit sandpaper. (One or two passes with the palm sander works best for me.)

After sanding, wipe on a liberal amount of dye, working it into the wood. Then wipe away the excess.

One more thing. I've even had good results with this technique when using oil-based stains.

Jim Grady
Spring Valley, California

WE BUY TIPS

If you would like to share an original tip or idea, send it to *Woodsmith*, Tips and Techniques, 2200 Grand Avenue, Des Moines, Iowa 50312. Or if it's easier for you, FAX it to us at: 515–282–6741.

We will pay (upon publication) $25 to $100, depending on the published length of the tip. Please include an explanation, a photo or sketch, and a daytime phone number.

Quilt Rack

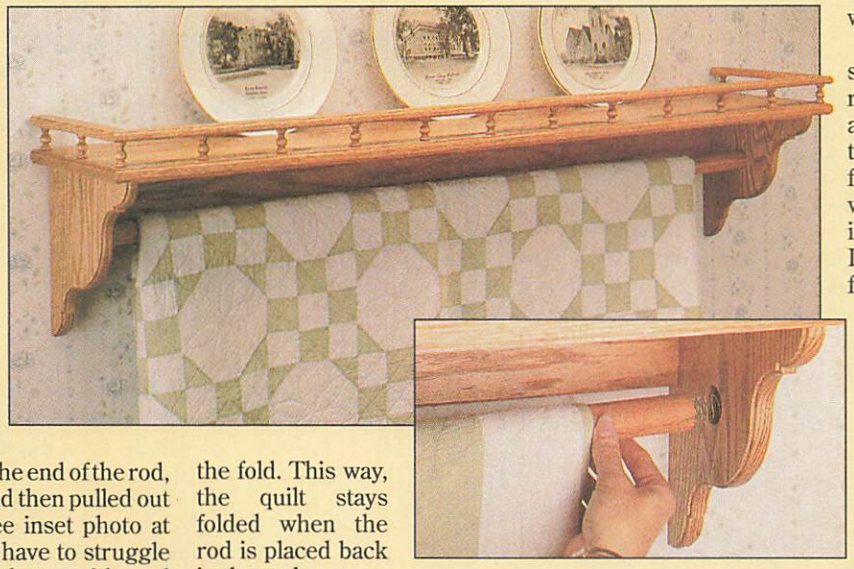

A lot of the quilts I've seen are hung just for display. But sometimes a quilt actually gets *used*. And that was one of the main challenges we faced when we sat down to design this Quilt Rack.

On some quilt racks the rod for holding the quilt is permanently attached. But for convenience, I wanted the quilt-holding rod on this Quilt Rack to be removable. (Almost like the toilet paper holder in a restroom.)

By installing a spring in the end of the rod, it can be slid toward one end then pulled out for hanging up a quilt, see inset photo at right. So a person doesn't have to struggle to thread the quilt between the top of the rod and the bottom of the shelf.

Instead, the quilt can be folded exactly where you want it, then the rod slid through the fold. This way, the quilt stays folded when the rod is placed back in the rack.

WOOD. This Quilt Rack is made entirely out of red oak. So, why not use some other kind of wood? The answer, again, has to do with the dowel rod.

To keep the rod in scale with the rest of the rack, the rod is 1¼" in diameter. But dowel rod that large isn't easy to find in many types of wood. However, it *is* readily available in red oak, so I built the entire project from oak.

(Refer to page 31 for some sources of 1¼"-dia. oak dowel and the other hardware to build the Quilt Rack.)

FINISH. In order to give the Quilt Rack more of an aged appearance, I stained the wood with a coat of Minwax Golden Oak.

Then, to protect the wood, I applied two coats of an oil/urethane mixture (General Finishes' Two-Step Sealacell).

EXPLODED VIEW

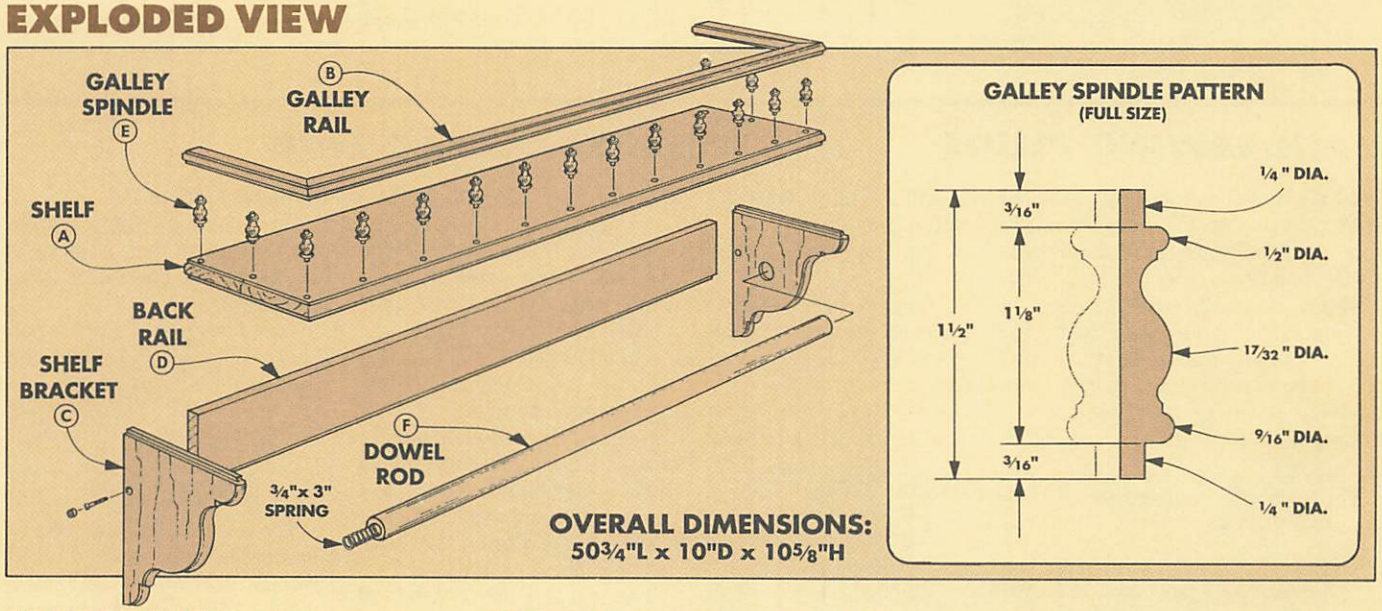

MATERIALS

A	Shelf (1)	¾ x 10 – 50¾
B	Galley Rail (1)	½ x 1¼ – 72 (rgh.)
C	Shelf Brackets (2)	¾ x 9¼ – 9½
D	Back Rail (1)	¾ x 3½ – 47¼
E	Galley Spindles (16)	See Pattern
F	Dowel Rod (1)	1¼ Dia. – 47¾

(See page 31 for supplies needed.)

CUTTING DIAGRAM

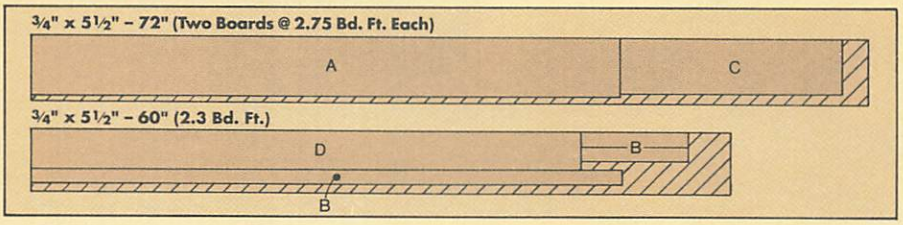

SHELF

I started building the Quilt Rack by first making the shelf. It's a long board that connects the sides (brackets) and serves as a protective "roof" for the quilt.

CUT TO SIZE. First, edge-glue two pieces of ¾" stock for the shelf blank, see Fig. 1. (It's hard to find flat, wide pieces of stock.) Then cut the **shelf (A)** to finished size.

GROOVE & DADOES. Next, to create a trough for displaying plates, I routed a stopped groove along the top of the shelf toward the back edge, see Fig. 1a.

Note: Refer to page 16 for more on routing stopped grooves and dadoes.

After routing the groove on top of the shelf, the next step is to rout stopped dadoes on the *bottom* side for joining the shelf to the shelf brackets, see Fig. 2.

EDGE PROFILE. Finally, I routed a decorative edge around the front and sides of the shelf, see Fig. 3. Note: By raising the roundover bit above the table, a ⅛" shoulder is created as an accent, see Fig. 3a.

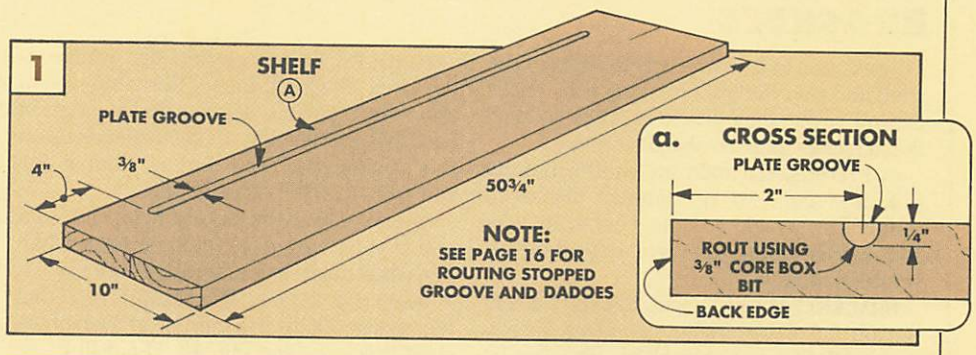

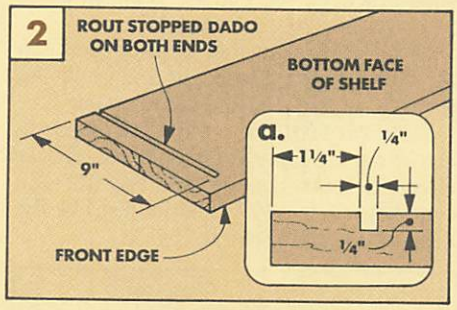

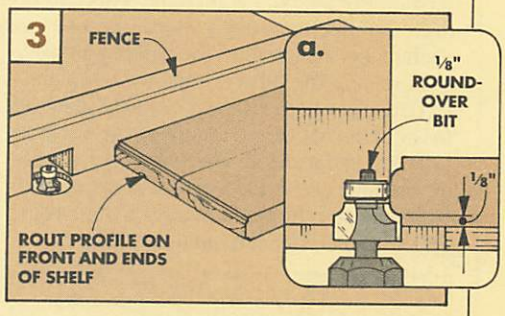

GALLEY RAIL

After completing the shelf, I started work on the galley rail. This is a U-shaped "fence" that extends around the top of the shelf.

The galley rail is connected to the shelf with a series of sixteen small galley spindles, see photo on the facing page. These can be purchased (see Sources on page 31) or they can be turned on the lathe, see the Full-Size Pattern on the facing page.

CUT TO SIZE. First, I cut three pieces to finished width for the front and side sections of the **galley rail (B)**, see Figs. 4 and 4a.

Design Note: I cut the galley rail from ½"-thick stock so it wouldn't look too thick in relation to the rest of the project.

EDGE PROFILE. With the three pieces of galley rail ripped to finished width, I routed a decorative profile on all four edges of each piece, see Fig. 4a. Note: These shoulders are only 1/16", not ⅛" like on the shelf.

CUT MITERS. Now the three rail pieces can be mitered to fit around the top of the shelf. The front piece is mitered to the same *length* as the shelf, and the side pieces to the same *width* as the shelf, see Fig. 4. But they're not glued together yet.

SPINDLE HOLES. Next, I marked the position of the holes for the spindles on the top side of the shelf, see Fig. 4. Then I used a try square to transfer the marks to the bottom side of the rail pieces, see Fig. 5.

Now, the shallow holes can be drilled in the top of the shelf, see Fig. 6.

Finally, I drilled all the holes on the three rail pieces *except* the holes that go into the miters, see Fig. 7. It's easier to drill these two holes after the rail has been glued up into a "U" shape, see Fig. 8.

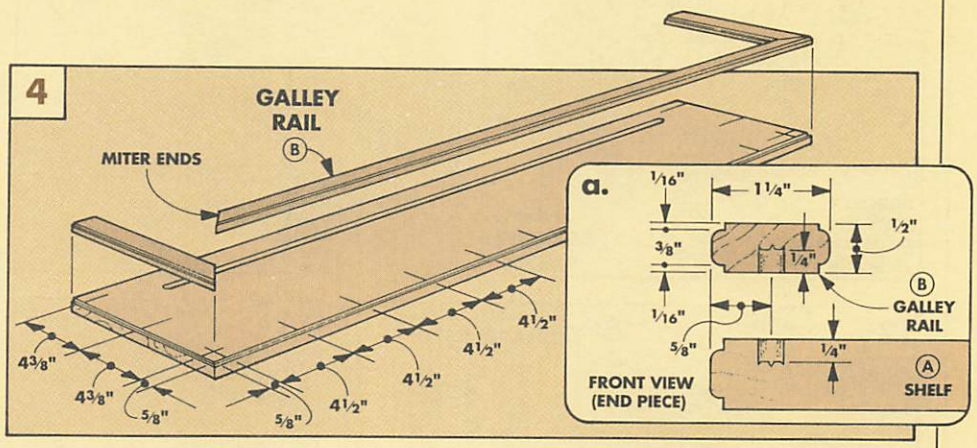

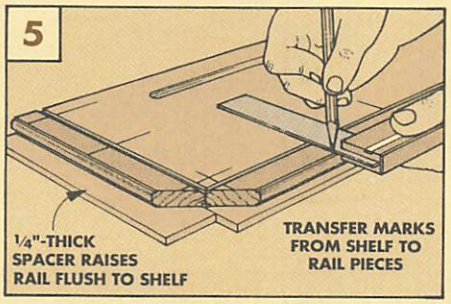

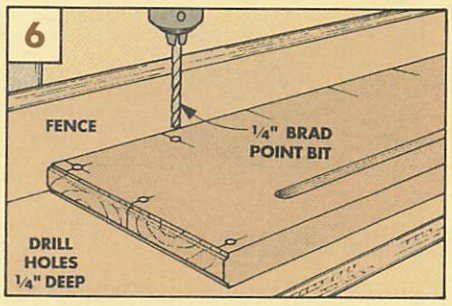

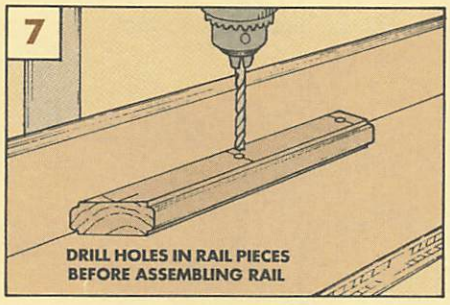

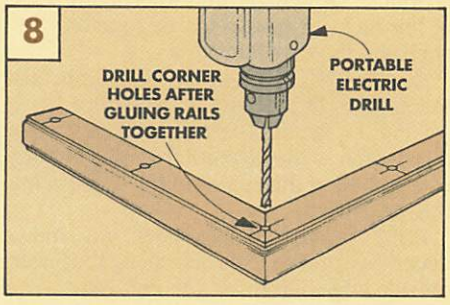

BRACKETS

There needs to be some way to support the shelf and also the quilt hanging rod. That's the job of the shelf brackets. They're functional pieces that are also decorative.

CUT TO SIZE. To make the **shelf brackets (C)**, first cut two rectangular blanks to rough size, see Fig. 9. Note: I cut the blanks so the grain would run *vertically* on the assembled rack.

BRACKET PATTERN. Next, to keep track of the top end of the brackets, I laid out the pattern on the face of each blank. This can be done by drawing the pattern directly on each piece. But to allow for making another quilt rack in the future, I made a template.

To do this, first cut a piece of 1/8" Masonite to the same width and length as the finished bracket, see pattern. Then draw the profile on the face of the Masonite and cut out the pattern. Sand the profile smooth, then transfer the profile to each blank, see Fig. 9.

TONGUES. Before cutting the profile of the shelf brackets, I used the table saw to cut a short tongue across the top edge of each bracket, see Fig. 10. Note: Sneak up on the thickness of the tongue until it fits snugly in the dado on the shelf.

After the tongues are cut, trim the front end of each tongue so the tongues are hidden when the rack is assembled, see Fig. 11.

DOWEL MORTISES. The dowel rod that holds the quilt fits in a mortise in each of the shelf brackets, see Fig. 12. (To drill these 1¼"-dia. mortises, see page 17.)

Design Note: One mortise is deeper than the other to permit inserting and removing the rod, see Fig. 12a and photo on page 6.

EDGE PROFILE. Now the shelf brackets can be cut to shape. Then rout a round-over along the curved edge, see Fig. 13. The round-over has a 1/8" shoulder just like the edge of the shelf, refer to Fig. 3a.

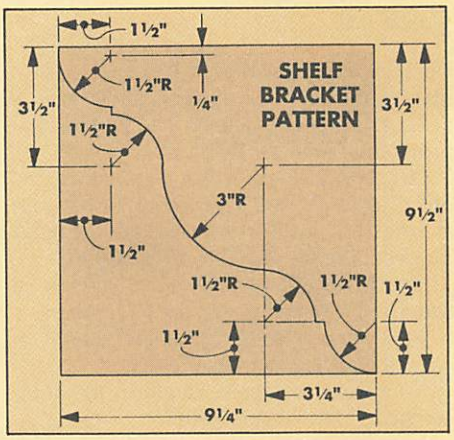

After routing the decorative profile on the shelf brackets, there's one little area that needs some work. At the inside curves on each bracket, I used a small chisel to square up the routed profile so it matches the bandsawn profile, see Fig. 13a.

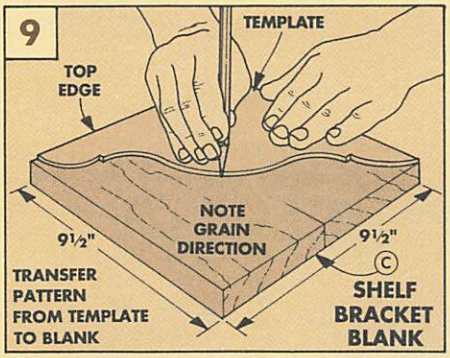

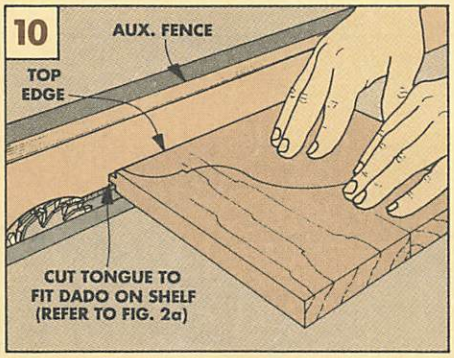

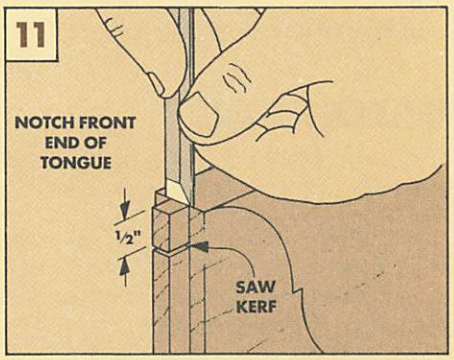

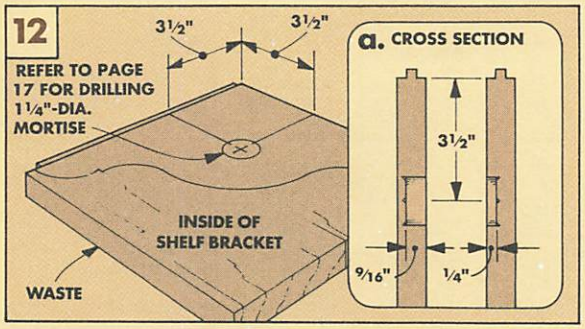

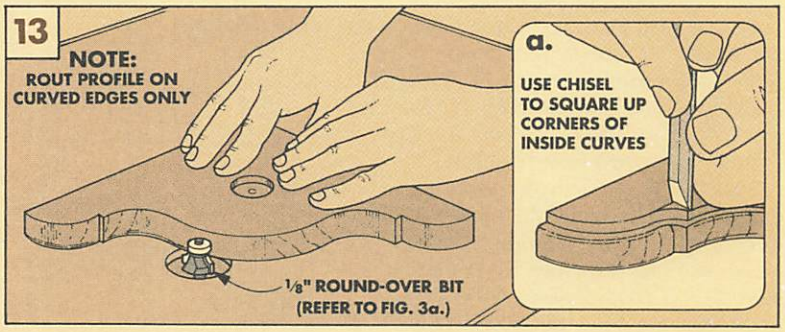

BACK RAIL

To give the Quilt Rack more of a finished appearance, I added a strip of wood to the back of the rack. (It also helps tie together the shelf and the shelf brackets.)

CUT TO SIZE. First cut the **back rail (D)** to length to fit between the shelf brackets, see Fig. 14. As for the *width* of the rail, I cut it the same as the distance from the bottom of the shelf to the center of the mortise for the dowel rod.

ROUT PROFILE. Finally, rout one more decorative profile. This time along the lower outside edge of the rail, see Fig. 14a.

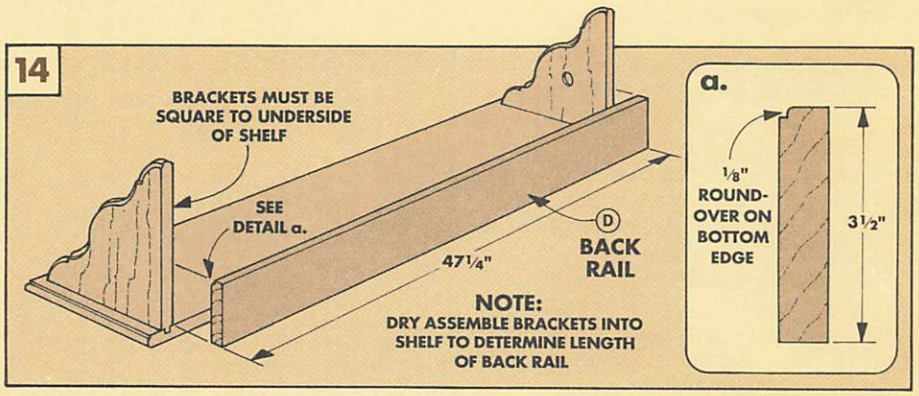

ASSEMBLY

When it comes time to assemble the parts of the Quilt Rack, you need about four hands. But using several clamps and following a certain sequence works just as well.

DRY ASSEMBLE. First, dry assemble the shelf on the brackets with the back rail in between, refer to Fig. 14. Then temporarily clamp the parts in place, see Fig. 15.

Now, drill a counterbore for a wooden plug into the side of each shelf bracket. Then, drill a shank hole through the bracket and a pilot hole into the rail, see Fig. 15a.

GLUE & SCREW. Next, I disassembled the pieces and started gluing them back together. First, glue the tongues on the brackets into the dadoes in the shelf.

Then, install the back rail with glue along the upper edge of the rail and woodscrews into the ends. (Don't put glue on the ends.)

Finally, clamp everything in place and plug the screw holes when the glue has dried.

ADD SPINDLES & GALLEY RAIL. The last part of the assembly process involves gluing the **galley spindles (E)** into the mortises on top of the shelf, see Figs. 16 and 16a.

Then, glue the U-shaped galley rail onto the tops of the spindles.

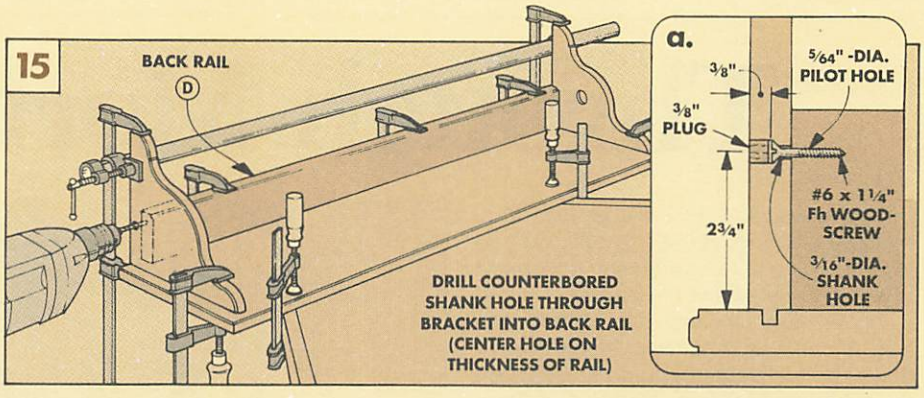

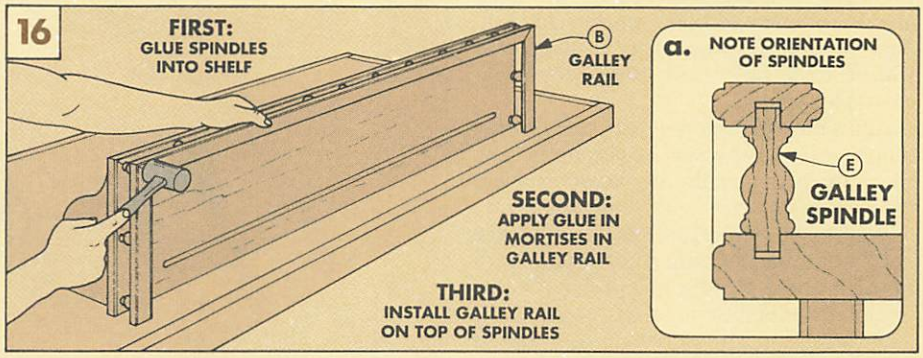

DOWEL ROD & HANGER PLATES

The heart of this project is a spring-loaded rod for hanging a quilt. But in order for the rod to work properly, the dowel must be cut to the correct length — long enough so it won't drop out of the holes, but not so long that it can't be removed.

CUT & DRILL. To determine the correct length of the **dowel rod (F)**, measure between the brackets and add ½", see Fig. 17. This way, when the dowel is inserted, it will bottom out in the shallow (¼"-deep) hole and fit ¼" into the deeper (9/16") hole in the bracket on the opposite side.

After cutting the rod to length (47¾" in my case), drill a ¾"-dia. mortise centered on one end for a 3"-long compression spring, see Fig. 17a.

Shop Note: To locate the center of this hole, I used a compass set to one-half the diameter (the radius) of the dowel, see Fig. 18. The point on the compass will leave a small hole indicating the center of the dowel.

HANGER PLATES. After gluing the spring in the mortise (I used epoxy), all that's left is to attach a pair of hanger plates to the back of the rack, see Fig. 19.

Shop Note: A shallow hole in the edge of the shelf will permit the head of the mounting screw (in the wall) to slip in behind the hanger plate, see Fig. 19a.

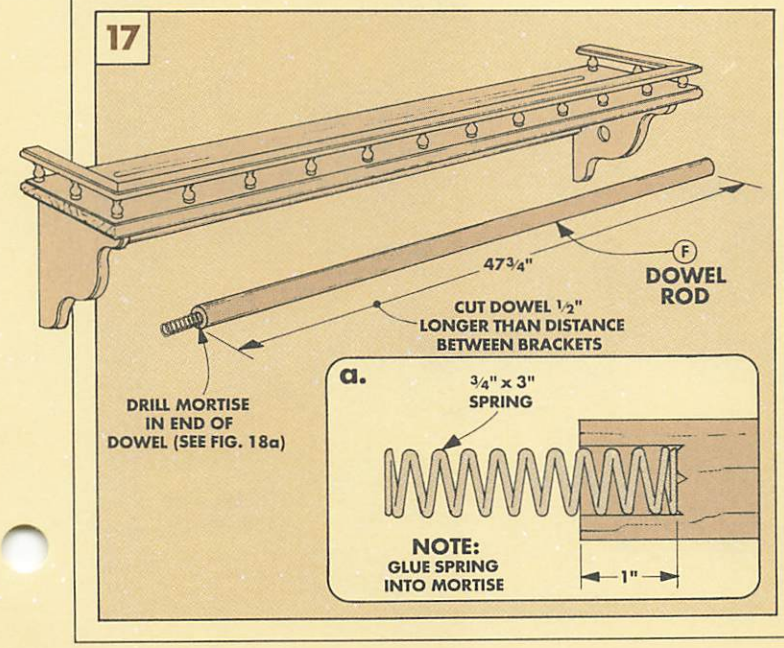

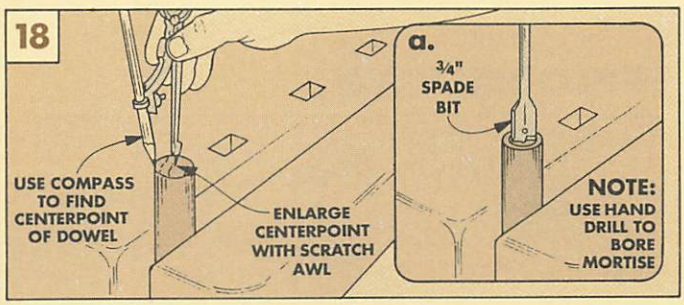

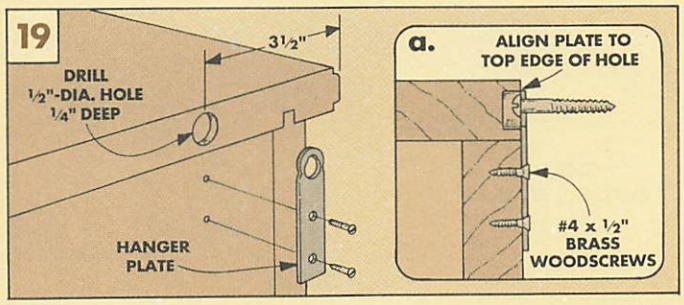

Through Mortise Jig

It's not unusual to design a jig to help in building a project. But it's not often the jig gets designed at the same time the project is being designed. Let me explain.

As we were planning the Bookcase on page 20, I knew the project would feature through mortise and tenon joints. That's the traditional Craftsman style. But these are no ordinary through mortise and tenons — they're designed to be almost 8" wide. (For the rail at the bottom of the Bookcase side frames.)

And a through tenon — especially a wide tenon — requires a perfect-fitting mortise. So as the plans for the Bookcase evolved, my approach to cutting the joint did too.

INSIDE OUT. In the past I've almost always cut the mortise first, then cut the tenon to fit the mortise. But for this project I knew the joint would have to be cut "inside out." And there was a good reason — it had to do with the shop-made plywood panel that fits in the side frame, refer to the photos on pages 22 and 23.

The best procedure was to first cut a groove for the panel, then cut the tenon to match the groove. And finally "deepen" the groove to create a through mortise for the tenon. Because the mortise is cut last, it will have to fit the tenon perfectly.

Here's where the Mortise Jig comes in handy. It helps when laying out the mortise *and* when cutting it to fit the tenon.

SLIDING JAWS. This jig is simpler than it looks. It's basically two sets of adjustable jaws. The outside jaws fit on the piece to be mortised. And the inside jaws indicate the thickness of the completed tenon. (The next two pages describe how to build, set up, and use the jig.)

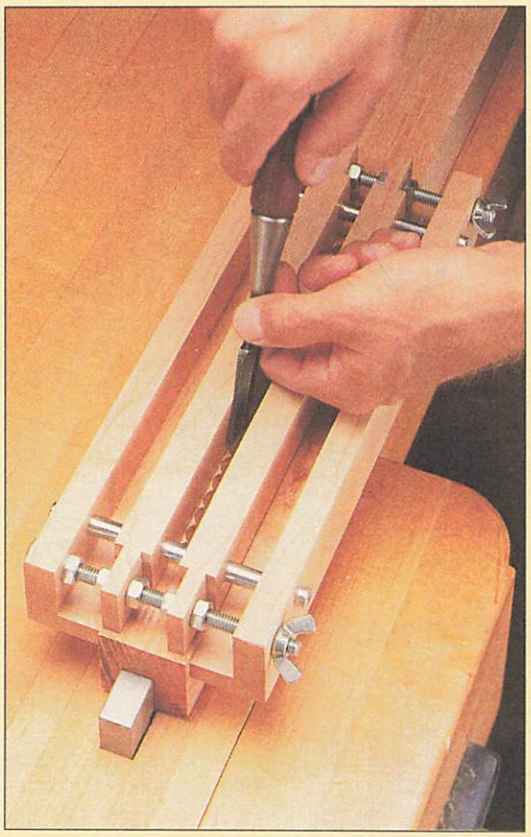

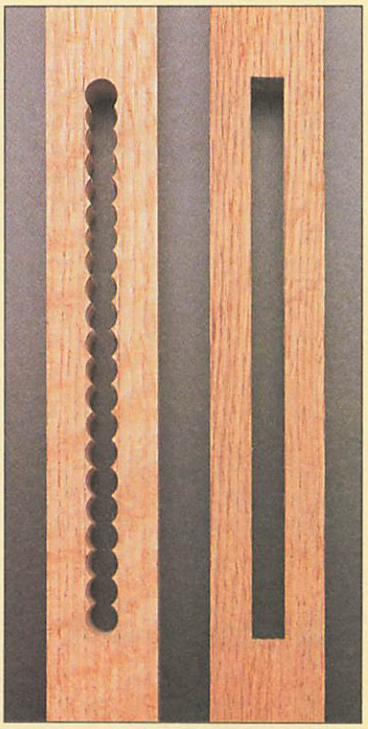

After roughing out the mortise with a drill press (left photo, above), attach the jig to guide a chisel for cleaning up the mortise (right).

HARDWARE. Except for the block of hardwood, everything needed to build this jig can be found at a local hardware store, see the Supplies list below.

EXPLODED VIEW

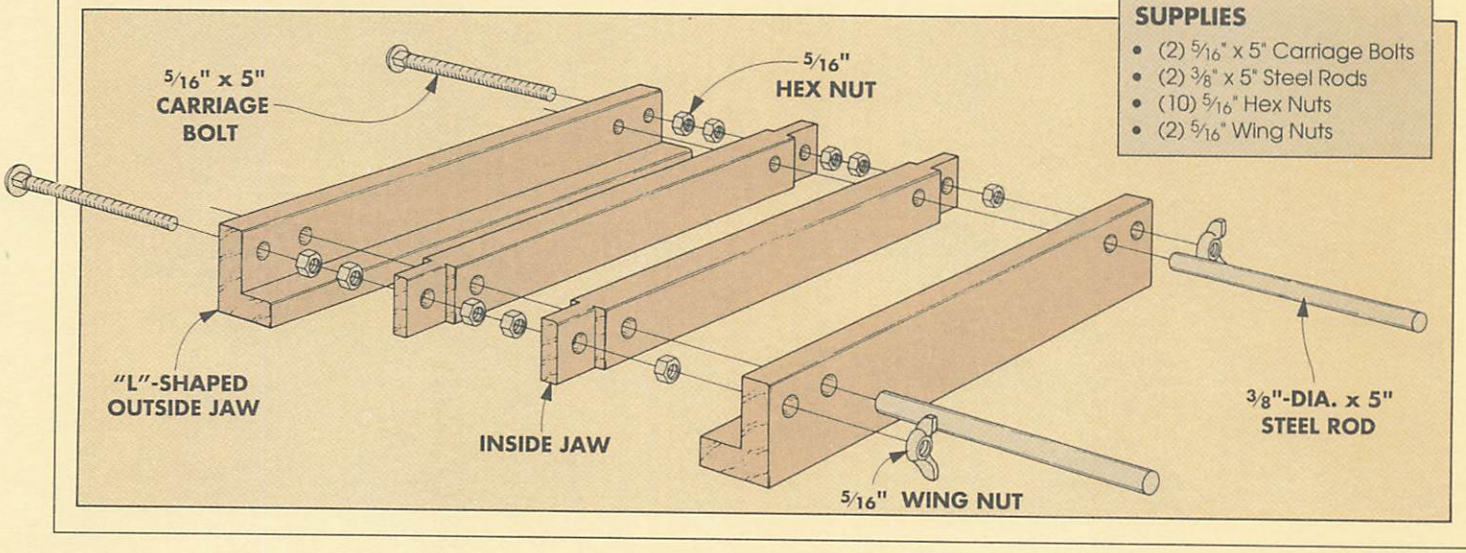

SUPPLIES

- (2) 5/16" x 5" Carriage Bolts
- (2) 3/8" x 5" Steel Rods
- (10) 5/16" Hex Nuts
- (2) 5/16" Wing Nuts

BUILDING THE JIG

As complicated as it looks at first, this mortising jig is really quite simple to build. (And also to use.)

The jig starts out as one block of hardwood (I used hard maple) that's ripped into four strips for the two sets of jaws.

Then the jig is assembled with two carriage bolts and nuts (for adjustability) and two steel rods (to keep the jaws aligned and prevent them from twisting).

HARDWOOD BLOCK. To build the jig, I started with a block of wood that was 3" to 4" longer than the mortise to be cut, see Fig. 1. This way, the jig doesn't have to be moved after it's clamped to the workpiece.

After cutting the block to size, drill four holes through the block for the carriage bolts and steel rods, see Fig. 1a.

KERF & RIP. The two outside pieces of the jig are L-shaped for clamping onto the sides of the piece to be mortised. To cut the rabbets that create the "L," start by ripping a pair of shallow kerfs along the bottom side of the block, see Fig. 2.

Then, rip the block in half, see Fig. 3. Note: To end up with two identical-size pieces, run each half of the block between the fence and the blade, see Fig. 3a.

COMPLETE RABBETS. Here's when the two outside pieces of the jig become L-shaped. It's done by ripping another shallow kerf that intersects with the first kerf, see Figs. 4 and 4a.

Note: Save the small strips that get cut away from the "L's." They're used next to make the inside pair of jaws.

TONGUES. Next, I cut a short tongue on the ends of the two inside jaws, see Fig. 5. The tongues create a relief for the hex nuts that lock all four jaws together, see the photo below.

Shop Note: For the cheek cuts, I used the band saw, but a hand saw or tenoning jig in the table saw would also work. For the shoulder cuts, I used the table saw, see Fig. 6.

After the tongues are cut on both inside jaws, the jig is ready to be assembled.

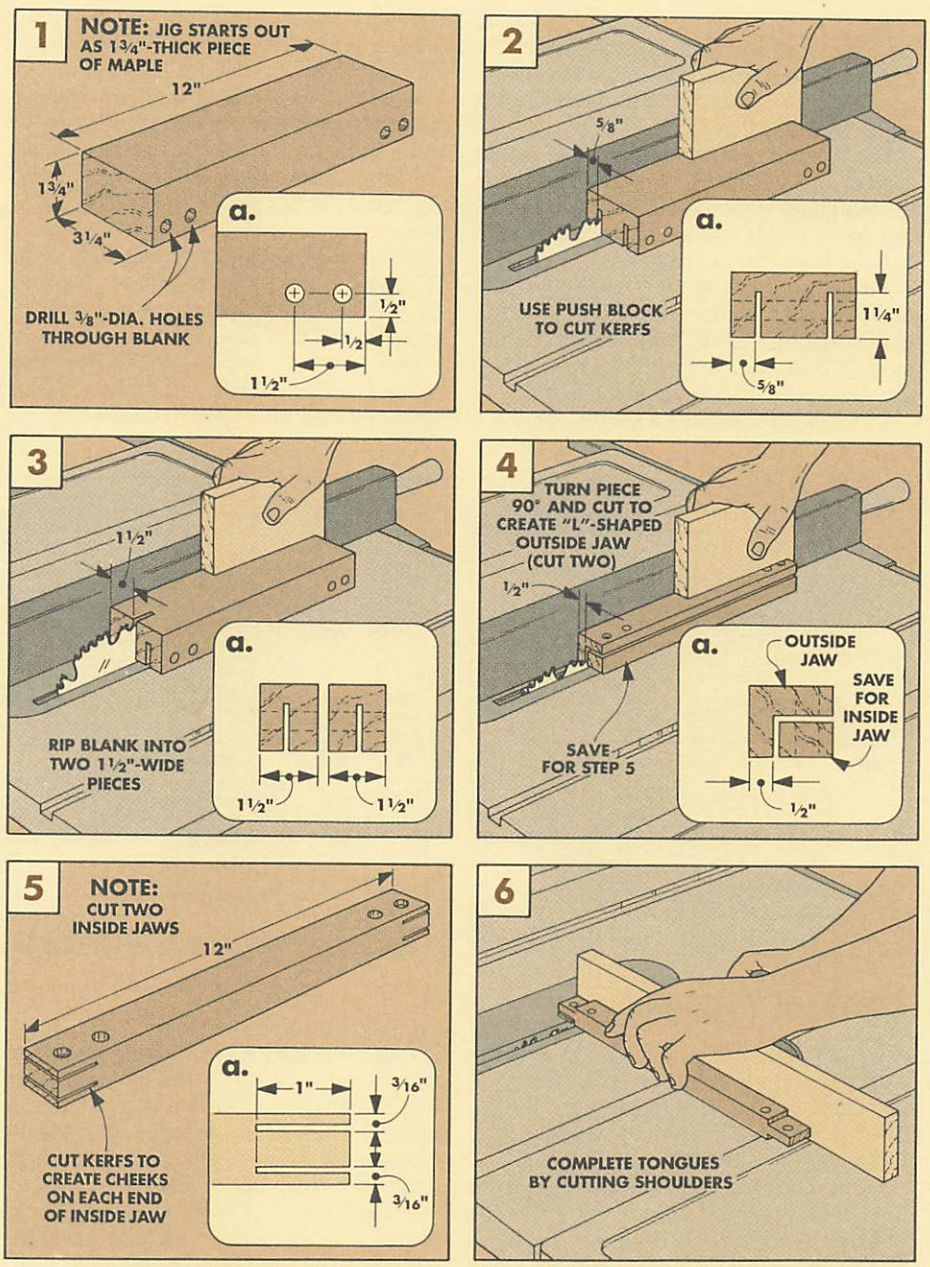

FINAL ASSEMBLY

Before assembling the jig, I applied a light coat of tung oil to the wood parts. Then I gathered up all the necessary hardware, refer to the Supplies box on the facing page.

Assemble the jig by first joining the four jaws — separated by hex nuts — with the two carriage bolts, see photo and the Exploded View. Note: The top edges of all four jaws should be flush.

Secure the last jaw with a pair of wing nuts. Note: Hex nuts are *not* needed on the inside of this piece, see photo.

Now the steel rods are driven into the other holes. (They slide easier if you wax them first.) Then the jig is ready to be used.

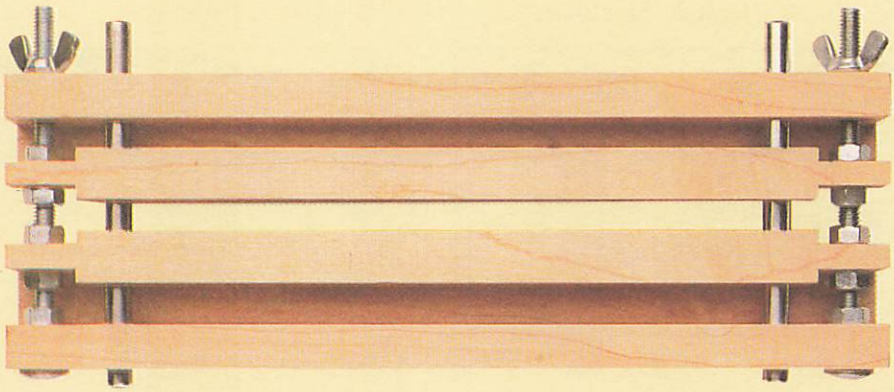

SETTING UP THE JIG

Before the jig can be used to cut a mortise, it needs to be adjusted to fit the tenon. So the tenons for the project should already be cut. Note: For reference, I numbered each of the jaws, see Fig. 8a.

I've found that a through mortise is usually cut on a thick piece (such as a leg), and the matching tenon is usually cut on a thinner piece (such as a stretcher), see Fig. 7 and the Bookcase on page 20.

To get around the differences in thickness, I started out by cutting a spacer that makes the jig "think" both pieces are the same thickness. (A spacer isn't needed if the two pieces *are* the same thickness.)

CUT SPACER. To make a spacer, first cut a strip of wood the same length as the jig. Then rip it so the thickness equals the desired setback of the rail from the post, see Fig. 7 at right.

ADJUST 2 TO 1. Now, adjustments can begin on the jig. First, place the cheeks of the tenon between the middle two jaws. Then slide the spacer (if one's being used) between the jaw labeled "1" and the face of the tenoned piece, see Fig. 8.

Now, turn the hex nuts alongside piece "2" until the spacer is sandwiched between the workpiece and the jig, see Fig. 8a. This half of the jig is now set.

ADJUST 3 TO 2. Now the inside jaws can be tightened around the tenon. This is done by turning the nuts alongside jaw "3," see Figs. 9 and 9a.

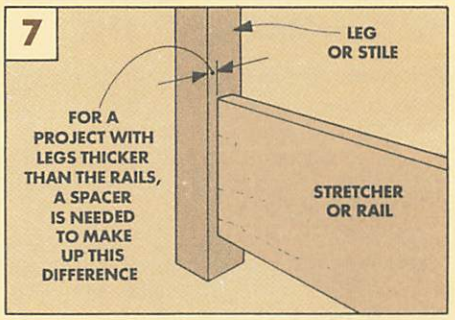

ADJUST 4 TO 3. Next, the jig can be adjusted to the thickness of the mortised piece. First pull the tenoned piece out of the jig. (Don't turn any nuts.) Then set the jig over the piece to be mortised, see Fig. 10. Now tighten the outside jaw ("4") against the right side of the workpiece, see Fig. 10a.

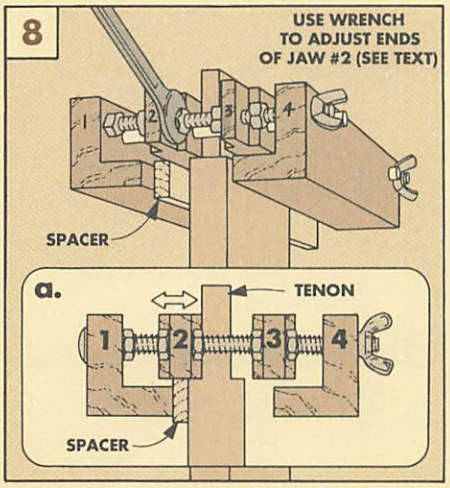

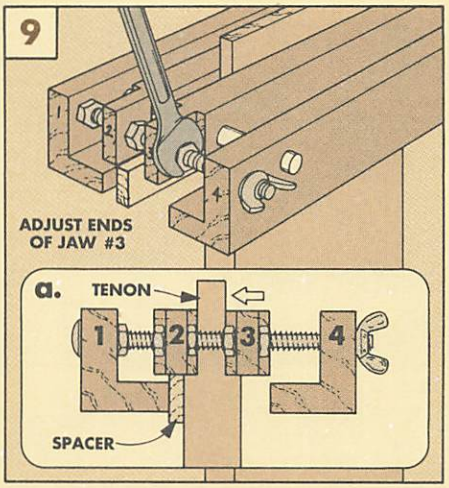

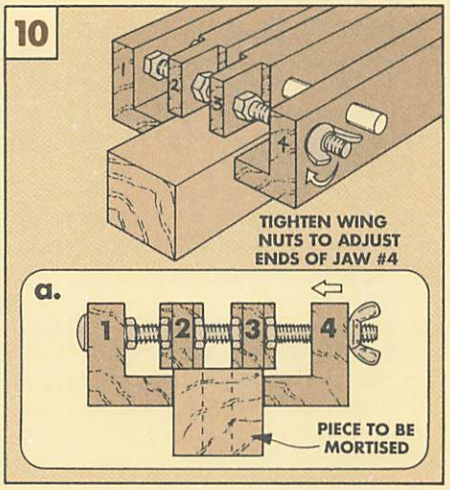

USING THE JIG

After the jig has been tightenend onto the workpiece, draw two lines inside the jig to indicate the sides of the mortise, see Fig. 11. Then remove the jig from the workpiece by loosening the wing nuts *only*.

Now, using a try square, draw two more lines to indicate the top and bottom of the mortise, see Fig. 11a. Then transfer these marks around to the opposite (back) side of the workpiece. These are for reference while drilling from the back side.

DRILL OUT WASTE. To cut a mortise, I prefer to rough it out on the drill press first, see Fig. 12. Note: Use a drill bit *smaller* than the desired width of the mortise. And for the cleanest mortise, drill halfway through from both sides of the piece.

CLEAN UP EDGES. Now the jig can be placed back on the face side of the workpiece and the wing nuts re-tightened.

Then use a sharp, wide chisel to chop the outside edges of the mortise in a clean, straight line, see Fig. 13. (Hold the back of the chisel tight to the jaws of the jig.) Again, work from both sides of the piece.

Then, when the mortise has been completely cleaned out, remove the jig and chisel the sides of the mortise to a slight taper, see Fig. 13a. (Chisel from the "out" side face.)

By slightly enlarging the inside of the mortise, the tenon can be inserted more easily. Yet the exposed end of the tenon should still fit the mortise perfectly.

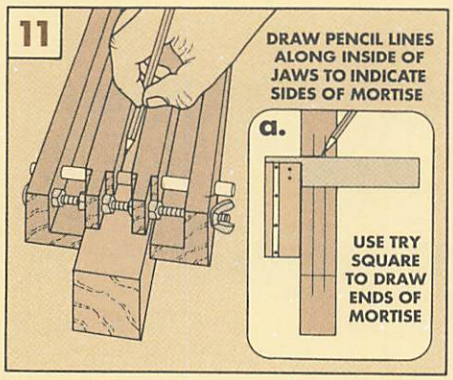

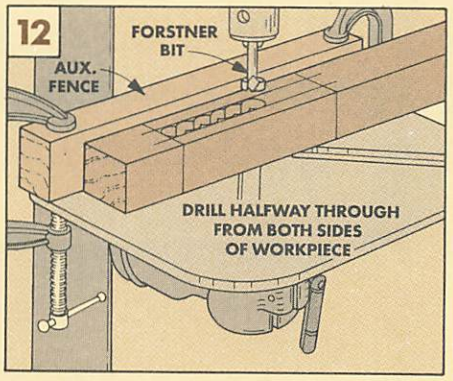

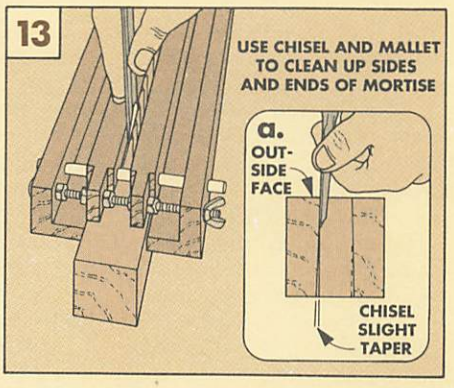

Through Mortise & Tenon

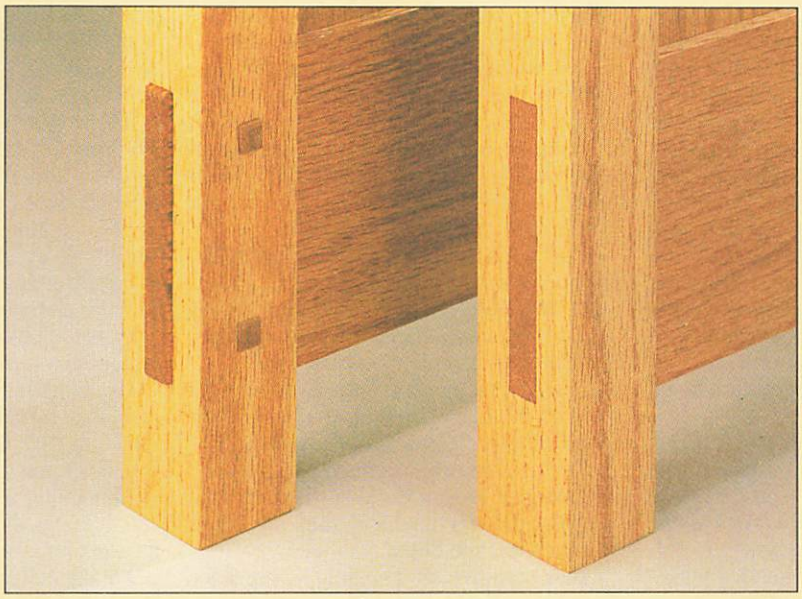

One of the strongest joints you'll find on a project is a mortise and tenon. And a *through* mortise and tenon joint not only gives you a strong joint, but a decorative look.

When the tenon is glued into the mortise, the two fit together like the handle in the head of a hammer, see photo. The end grain on the tenon is a decorative contrast to the long grain on the sides of the mortise.

PERFECT FIT. The main reason for gluing a long tenon into an open mortise is usually appearance. And for the *best* appearance, the parts of the joint have to be cut perfectly.

If there are any gaps where the tenon comes out of the mortise, it will be apparent — but it probably won't be the look you were expecting. That's why I follow a special sequence when cutting a through mortise and tenon joint.

SEQUENCE. Does that mean a through mortise and tenon joint is made differently than a traditional blind mortise and tenon? Not exactly. The mortise is usually cut first, then the tenon is cut to fit the mortise. So far, no difference. But because the *fit* of the joint is so important, I take a couple extra steps, see Cutting the Mortise, and Cutting the Tenon on the following pages.

Note: Sometimes there's a good reason to reverse the sequence and cut the *tenon* first. (The Bookcase on page 20 is an example.) In this situation, a special through mortising jig comes in handy, see the article on page 10.

OPTIONS. Like an ordinary mortise and tenon joint, a through mortise and tenon joint has some options. For one, the leg is often thicker than the rail, see photo at left and the drawing below.

But this is mostly a design decision — the parts could just as well be the same thickness.

And how far beyond the leg should the tenon stick out? It could be flush to the outside of the leg (right in photo) or stand a little proud with chamfered edges (left in photo). Again, it's mostly a design decision.

Finally, a through mortise and tenon joint is often pinned with small wood pegs through the cheeks of the tenon (left in photo). In the past this was done to lock the tenon in the mortise to create a stronger joint. But with the improved glues available today, the pegs are mostly for appearance. (See page 15 for more on installing pegs.)

HOW THE JOINT WORKS

There's more to a through mortise and tenon joint than one piece of wood sticking through another. If the parts fit together properly, the joint is strong in several directions. And it will look good, too.

The load-bearing strength of the joint comes from the bottom edge of the tenon resting in the bottom of the mortise, see drawing. It's what supports a panel in a frame or a top on a table.

The shoulders around the tenon give the joint resistance to racking and twisting. They can also hide imperfections around the inside edge of the mortise.

Probably the strongest part of a through mortise and tenon joint is the fit between the cheeks of the tenon and the cheeks of the mortise. When properly glued, the bond between the cheeks of the two pieces will produce a joint that's practically unbreakable.

Not only is this a strong joint, but it looks good, too. Especially if the exposed end of the tenon completely fills the mortise.

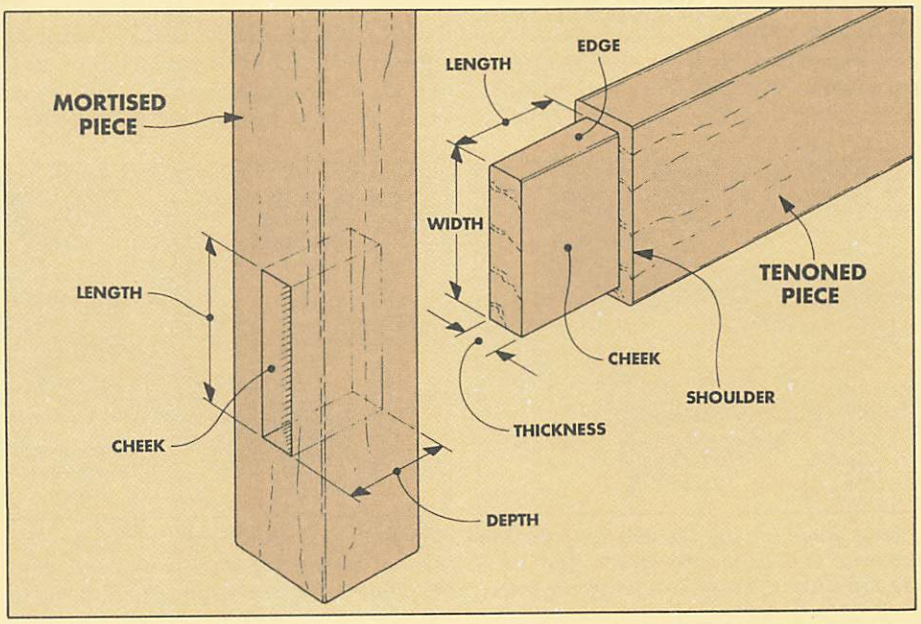

CUTTING THE MORTISE

The key to cutting a perfect through mortise is uniformity. The opening where the tenon comes through must have perfectly straight edges to fit tight around the tenon.

Here are a couple tips — and a guide — to make cutting a perfect mortise easier.

LAY OUT ENDS. I start by laying out (marking) the mortise on the *outside* face of the workpiece, see Fig. 1. To do this, first use a try square and a sharp pencil to draw a line indicating the top and bottom edges of the mortise. (The exact location of these marks will depend on the specifications of the particular project.)

Now, use a square to extend these lines around the workpiece to the opposite (inside) face.

MARK SIDES. Next, I mark the sides of the mortise. And for the most accuracy on the sides, I don't use a pencil. Instead, I make the marks using a chisel, a mallet, and a shop-made guide block, see Fig. 1. (Again, make the marks on the face of the workpiece where the end of the tenon will show.)

The guide block I use is simply a squared-up block of wood with a shallow rabbet cut along one edge. As simple as it is, the guide block is surprisingly helpful.

First, when it's clamped around one edge of the workpiece, the guide block helps to mark a perfectly straight line for the sides of the mortise. And after the mortise has been roughed out with a drill bit, the guide block helps hold a chisel straight up and down for cleaning up the mortise.

Note: This can also be done with the Through Mortise Jig shown on page 10.

SETTING OUT. There's a trick I use to help ensure crisp, clean edges on a through mortise. The trick is called "setting out."

To set out a mortise, first chop straight down on the chisel holding the back of the chisel tight to the guide block, see Fig. 1.

After marking the perimeter of the mortise, remove the guide block and make a second *angled* chisel cut that intersects with the first, see Fig. 2.

Then remove all the little three-sided slivers from the edges of the mortise.

Now you should be able to see the crisp, straight outline of a perfect through mortise. All that's left is to clean out the waste inside the marks.

BORE HOLES. At this point the mortise could be chopped out by hand. But it saves a lot of time (especially for deep mortises) to rough out most of the waste using the drill press, see Fig. 3.

To rough out the mortise, I use a Forstner bit *smaller* than the width of the mortise and drill a series of overlapping holes between the score marks.

Shop Note: For the cleanest mortise, bore halfway through from one side of the workpiece, then finish roughing out the mortise from the other side, see Fig. 4.

CHISEL CLEAN. The overlapping holes will leave a series of "ripples" on the cheeks of the mortise. To remove these ripples — and also complete the mortise — I use a chisel to pare the sides of the mortise, see Fig. 5. (Again, work from both sides.)

The guide block comes in handy here, too. It keeps the chisel right on the cut line as you clean up the sides of the mortise.

Finally, to insert the tenon more easily, I "back cut" the mortise slightly, see Fig. 5a.

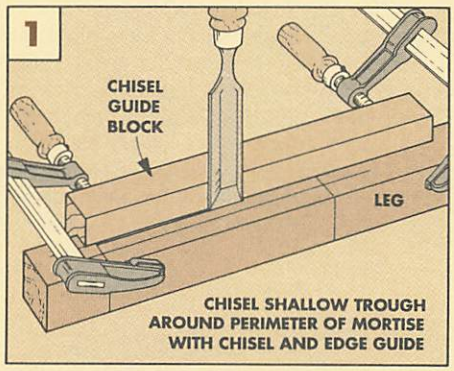

First mark the ends of the mortise using a try square and pencil. Then make a guide block for marking the sides with a chisel.

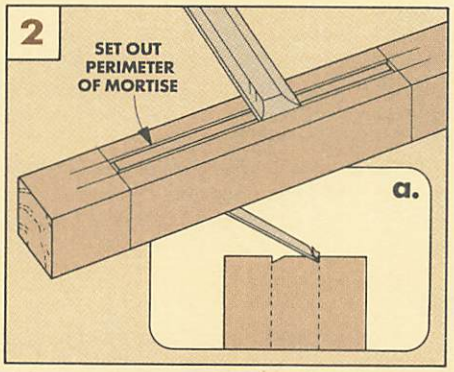

After scoring the sides with a chisel, "set out" the mortise by chiseling a slight bevel inside the score lines. Set out the ends too.

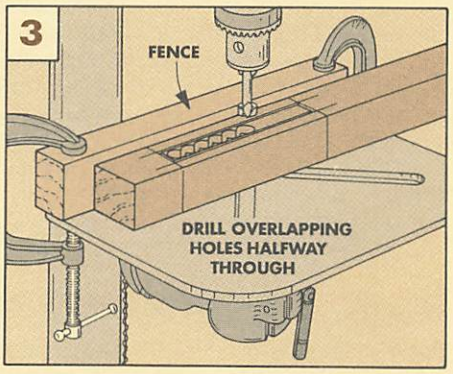

Rough out the mortise by drilling a series of holes inside the score lines. Use a Forstner bit smaller than the width of the mortise.

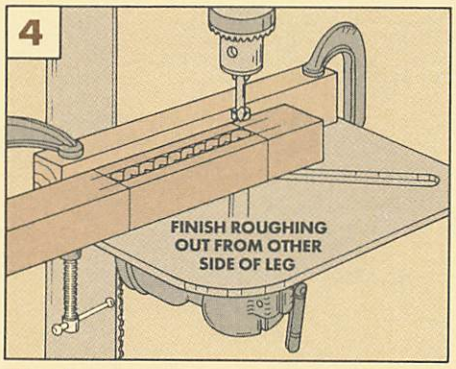

Finish roughing out the mortise from the opposite side of the workpiece. But keep the same face of the piece against the fence.

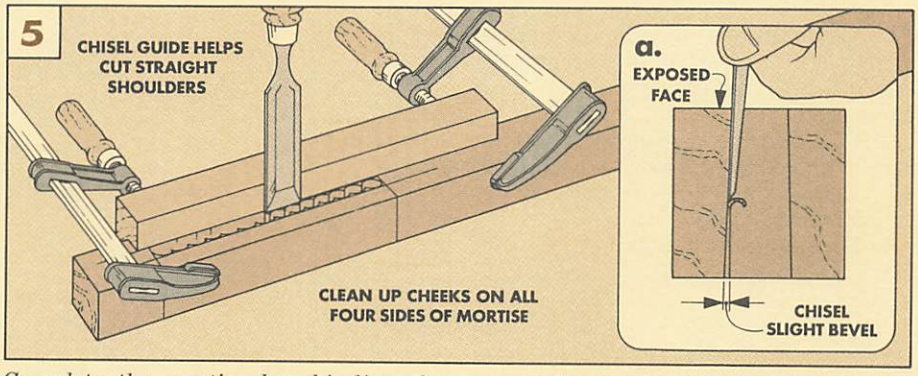

Complete the mortise by chiseling the sides of the mortise smooth and flat. Use the guide block to keep the chisel straight up and down and cutting in a straight line. After cutting from both sides of the mortise, chisel a slight bevel from the good face.

CUTTING THE TENON

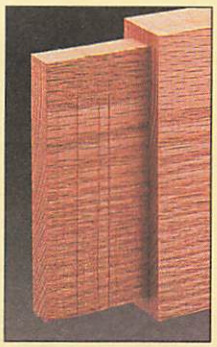

A tenon can come in any shape or size. But there's only one thing that counts — how well it fits in a mortise.

One of the easiest ways to cut a tenon is to use a dado blade in the table saw. And to help set up the saw just right, I start by cutting a tenon on a test piece. (Use a piece of wood the same thickness and width as the actual workpiece.)

TEST THICKNESS. To begin the tenon, raise the dado blade and make a shallow cut across the end of the test piece, see Fig. 1. Then flip the piece and make a second pass on the opposite side.

Shop Note: For the most control — and the cleanest cut — I cut tenons using the miter gauge with an auxiliary fence attached. This helps prevent chipout as the blade exits the workpiece.

Now check the test tenon in one of the completed mortises, see Fig. 2. The idea is to sneak up on the height of the blade until the end of this short tenon fits the mortise perfectly — not too tight and not too loose.

CUT CHEEKS. When the thickness of the tenon is set, the tenon can be cut to length, see Fig. 3. To do this, I again use the miter gauge and auxiliary fence. But this time with the rip fence as a stop.

Position the rip fence so the distance between the outside of the dado blade and the fence equals the desired length of the tenon. Now, cut the tenon by making several passes over the dado blade for each cheek.

CUT SHOULDERS. The last thing to do is cut the tenon to the desired width. I use the same fence setup as for cutting the cheeks, except the workpiece is passed over the blade standing on *edge*, see Fig. 4. This produces a tenon with equal-size shoulders.

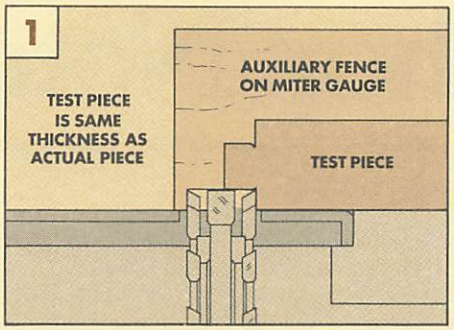

Begin cutting the tenon on a test piece. By adjusting the height of the dado blade, you can sneak up on the thickness of the tenon.

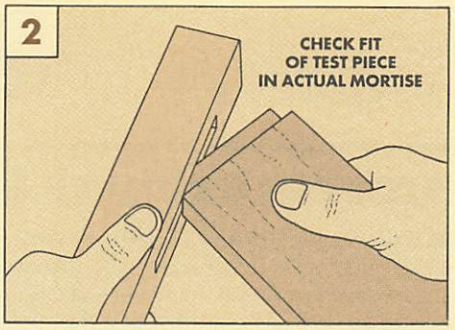

Test the fit of the tenon in a mortise on the workpiece. If the tenon is too tight, raise the height of the dado blade and cut again.

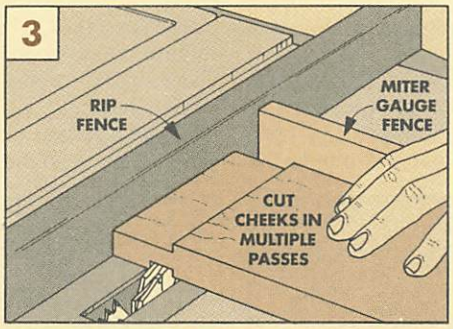

When the blade is adjusted for the correct thickness, cut the tenon to the desired length. Use the rip fence as a stop block.

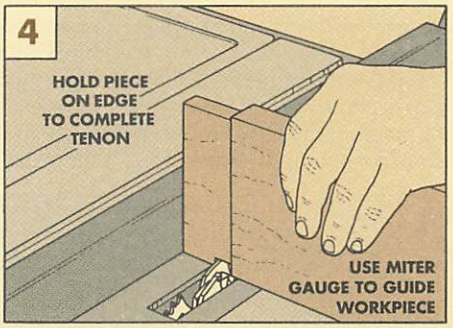

Now the tenon can be cut to the desired width. Don't move the fence, but the height of the dado blade may need to be adjusted.

ADDING DECORATIVE PEGS

It used to be that a long tenon needed to be pinned in a mortise. But these days, with improved wood glues, a peg doesn't have to do anything but look good. Careful work is the key to good looks.

It helps to think of a peg in a hole as a tenon in a mortise. So the procedure is similar to cutting a tenon to fit a mortise.

Lay out the mortise on the outside (good) face of the stile, see Fig. 1. Then drill inside the marks to a consistent depth (depending on the project).

Next, use a chisel to square up the corners of the mortise, see Fig. 2.

To make the pegs, cut a long strip to size so it's about 1/32" *thicker* than the width of the mortise. Then cut the pegs from the strip, see Fig. 3.

Finally, sand the buried end of each peg to a slight taper, and glue the pegs in the mortises. (See page 17 for a tip on this.)

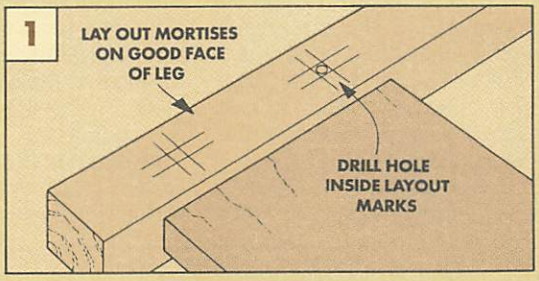

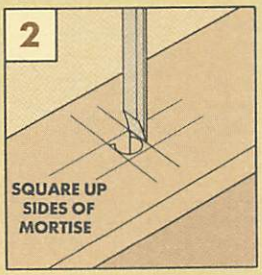

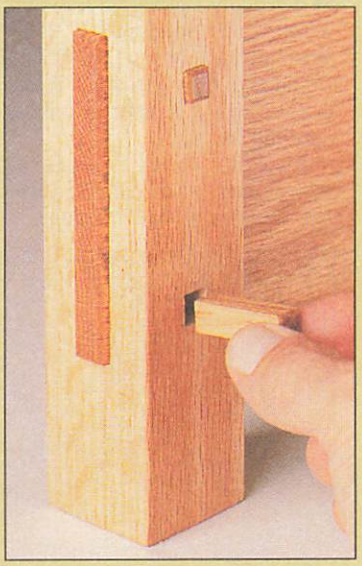

Shop Notes

STOPPED GROOVES & DADOES

■ Whether you're using a hand-held router or router table, routing stopped grooves and dadoes can be tricky. It all has to do with positioning the stop blocks.

With either method, it's important that the stop block be in the correct location. If it's not, the groove won't end up where it should.

HAND-HELD ROUTER. The first step in getting an accurate setup for hand routing is to lay out the groove right on the workpiece. Now the stops can be positioned.

To do this, first measure the distance between the edge of the router's base plate and the nearest edge of the bit.

Then using this measurement, position the stop near the layout lines that indicate the end of the groove. Now clamp the stop block in place, see Fig. 1.

To guide the router along the length of the groove, clamp a fence to the workpiece. (Clamp the fence parallel to the layout lines, using the same measurement as before.)

Now the stopped groove can be routed. Set the depth of the bit and tilt the router into the workpiece. When hand routing, move the router in the normal *left-to-right* direction.

ROUTER TABLE. The setup for routing stopped grooves and dadoes on the router table is basically the same as it is for a hand-held router. Except, the distance between the stop block and the *far* side of the bit determines the length of the groove, see Fig. 2.

When using the router table, move the workpiece in the normal *right-to-left* direction. So depending on which end of the workpiece you're routing, it may be necessary to *lower* the workpiece into the bit, see Fig. 2.

To rout the other end of the workpiece, reposition the stop to the other side of the bit. Then push the workpiece *into* the bit.

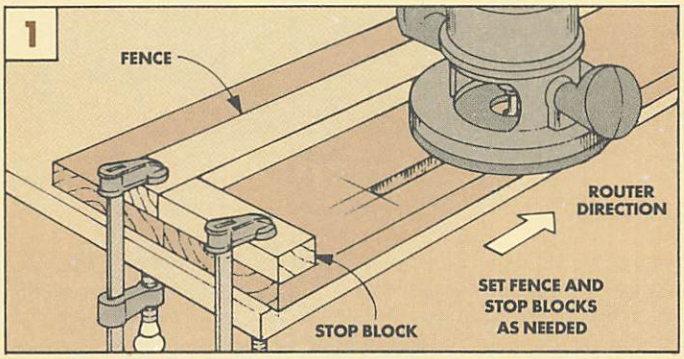

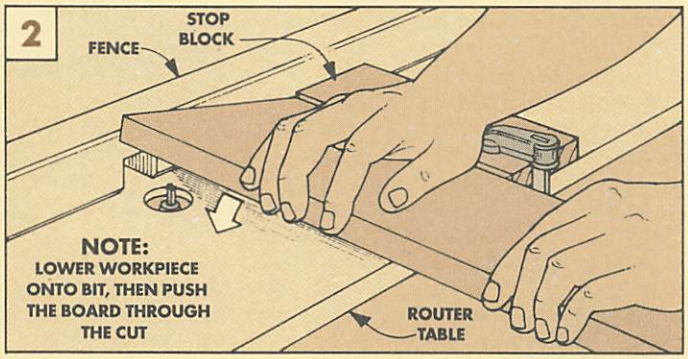

SCRAPING & SANDING CORNERS

■ Normally I like using a hand scraper and sanding block for scraping and sanding. But it can be hard to get right down into a corner with a scraper or typical sanding block.

Instead, when I need to scrape and sand corners, I use two tools shaped for the job.

RAZOR BLADE. To scrape out a corner, I use a razor blade from a utility knife, see Fig. 1. It works great for scraping away glue smudges. And it also comes in handy when I need to cut away dried beads of glue.

To use the razor blade, hold it at an angle and push or pull it with the grain of the wood — just like a hand scraper. When scraping, always push or pull the blade in the direction it's angled. (This way, it won't cut into the workpiece.)

BEVELED BLOCK. To sand a corner, I make a sanding block with beveled ends and beveled sides, see Fig. 2. The pointed ends and sides allow me to get the sandpaper right up against the corner.

Also, when I need to bear down on the sandpaper, the sanding block can be raised slightly and pushed into the corner, see Fig. 2a.

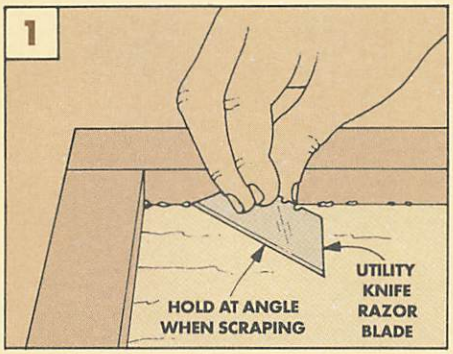

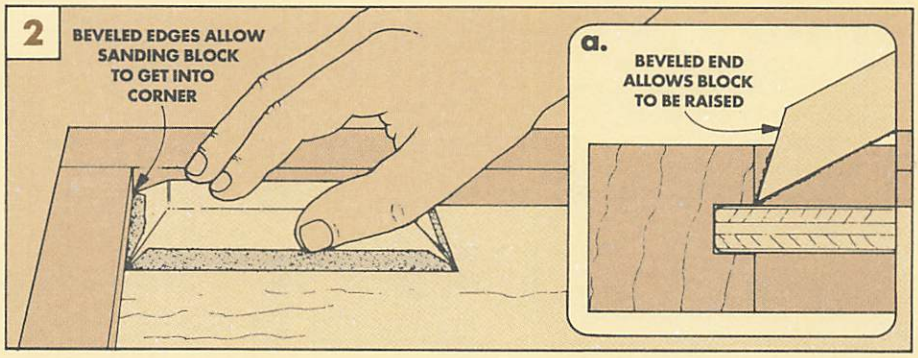

LARGE MORTISES

■ Forstner bits are ideal for drilling large flat-bottom mortises. But it can be hard to justify their cost if they're not used much. Another way to drill a large mortise is to use a hole saw and a straight router bit.

CUT HOLE. For the Quilt Rack shown on page 6, I needed to drill 1¼"-dia. shallow mortises for the quilt hanging rod. So I drilled the mortises in two steps.

The first step was to "outline" the mortise with a 1¼"-dia. hole saw, see Fig. 1. Then, once the mortise was established, it was ready to be cleaned out.

CLEAN HOLE. To clean out the mortise, I used my hand-held router with a ¼" straight bit.

Set the router bit to the same depth as the hole saw, see Fig. 2. Then clean out the waste, staying within the circle cut by the hole saw.

A bit of advice though. Practice on a piece of scrap before routing the actual workpiece. You want to make sure you have a feel for routing within the circle.

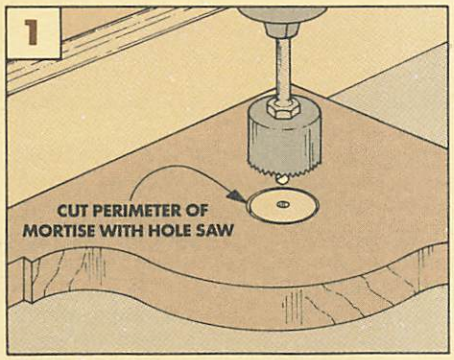

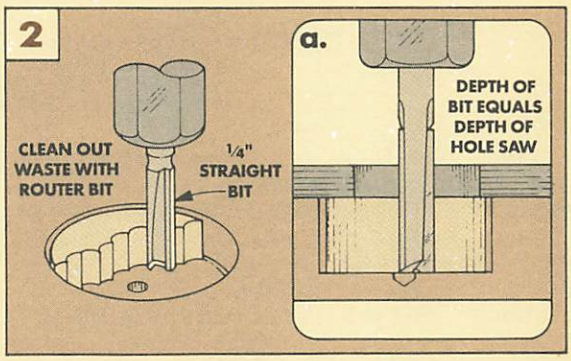

BIT SCRAPER

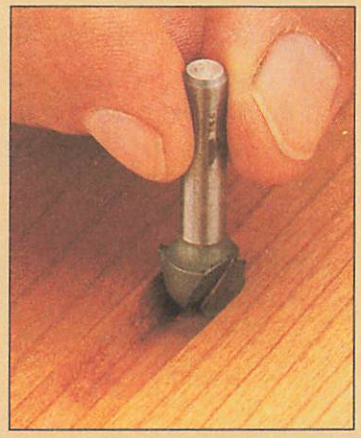

Occasionally when routing a profile, I'll end up with burn marks. To remove them, I use the same router bit (removed from the router) as a scraper.

Hold the scraper at a slight angle. Then scrape the profile in the direction of the cutter on the bit. After a few passes, the marks should be removed.

DEPTH STOP

■ When pinning a mortise and tenon joint, I usually set the peg flush with the frame. But for the Bookcase (page 20), I wanted the peg to match the through tenons. They stick out ⅛" beyond the face of the frame.

To set the pegs consistently with a ruler would have been difficult. It would have been easy to set the pegs too deep. To set the pegs accurately, I made a depth stop from a ¾"-thick scrap of hardwood, see drawing.

DRILL HOLE. To make a depth stop, drill a hole in the scrap block the same depth you want to set the pegs. Once a peg is glued in place, set the stop over the peg, see detail. Then tap the stop lightly with a hammer until it bottoms out against the frame.

PANEL TEAR-OUT

■ When making framed panels, grooves are normally cut in the frame to fit the panel. But just because a groove is cut to fit a panel doesn't necessarily mean it will go together easily.

TWISTS OR BOWS. If the panel or frame is twisted or bowed when you're fitting them, it can be difficult getting them together. If they're out of alignment too much, the panel could tear out the edges of the groove, see drawing.

ROUND OVER EDGES. To avoid this, I first round over the edges of the panel with a sanding block. This narrows the panel just enough so when the panel is installed it won't hang up on the frame. And this reduces the chance for tear out.

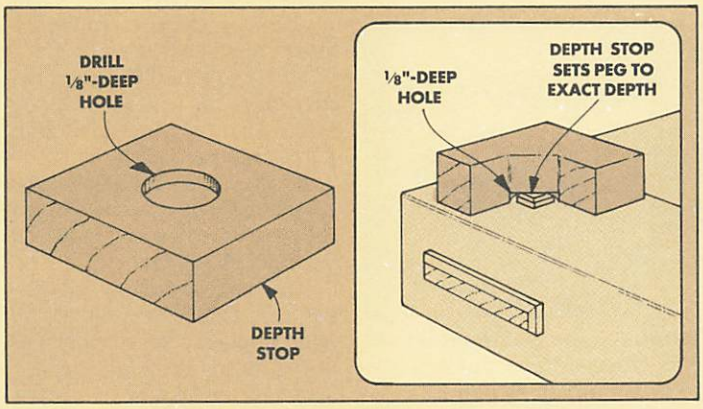

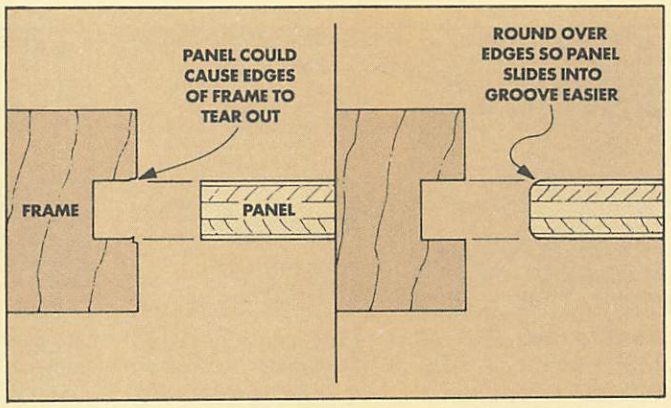

Smoothing Panels

In Woodsmith No. 86, we featured an article on gluing-up panels. During the development of that article, a number of us got into a lively discussion on different ways to smooth a panel after the glue dries.

Phil Totten, one of our assistant editors, uses a rather unique method for smoothing a panel. His panels always seem to end up smooth and fairly flat. So I've asked him to describe his technique in this article.

— Don

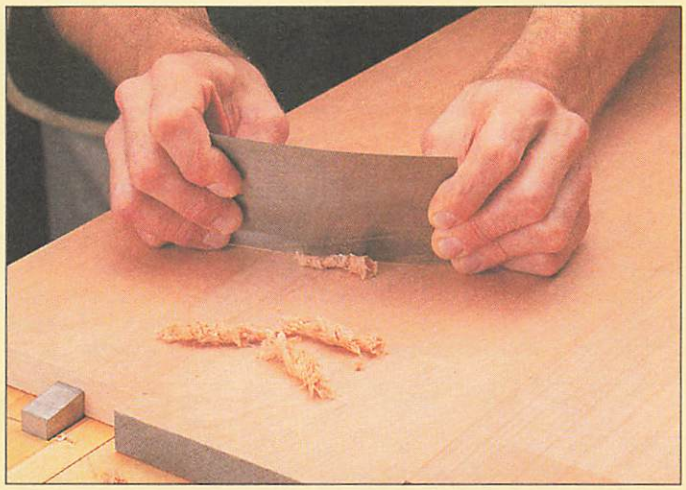

■ When my co-workers found out I use a hand scraper and portable belt sander to flatten and smooth glued-up panels, they told me it couldn't be done. When it comes to hand tools, they felt a hand plane was the only tool that could be used for flattening.

And technically they're correct. A hand scraper can't really flatten a panel. A scraper is normally reserved for finish work — in place of sandpaper. It's not designed to flatten a glued-up panel.

A flat panel has a level or even surface over the entire panel. A smooth panel has a surface that's free of defects — it isn't necessarily perfectly flat.

But with practice (and a lot of patience), I've been able to scrape and sand glued-up panels smooth and fairly flat. They're flat enough for most of my projects. And most people would be hard pressed to tell whether they're flat or *just* smooth. (For my thoughts on flattening a panel with a hand plane, see the small box on the next page.)

SANDER OR SCRAPER? The trick to determining whether to start smoothing with a scraper or a belt sander is to "read" the panel first. But before I do this, I scrape off any dried glue along each joint line with a sharp paint scraper. Note: If you're using a paint scraper for this, the corners of the blade should be rounded over to avoid gouging the panel.

Once the dried glue is removed, I begin reading the surface of the panel.

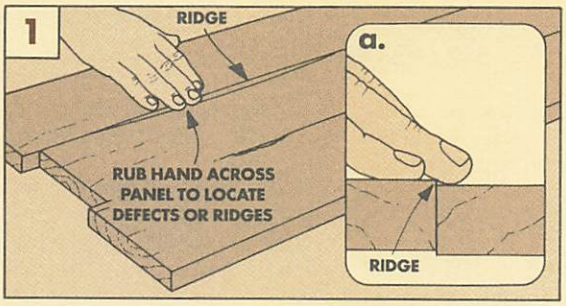

Read Panel. *The first step to smoothing a panel is to locate the areas that need smoothing. To do this, rub your hand over the panel to feel the high and low areas.*

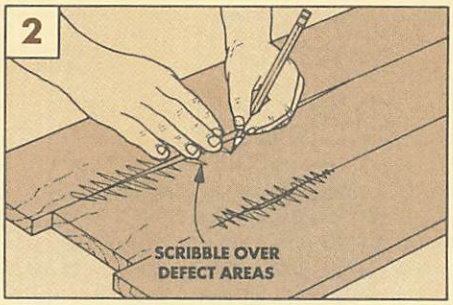

Mark Panel. *As you're locating the high and low areas, mark them with a pencil. Now the panel is ready to be smoothed.*

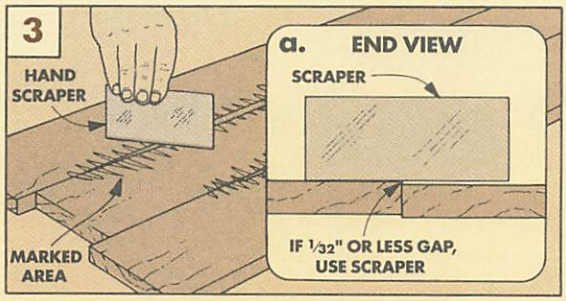

Check Areas. *Prior to scraping, check to see how much material is going to be removed. To do this, I place a hand scraper on edge over the marked area.*

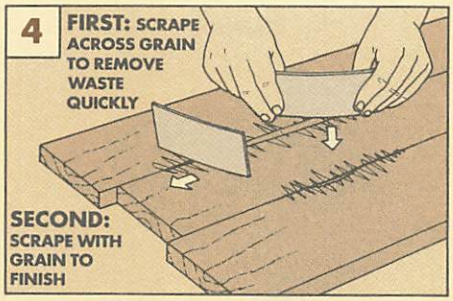

Scrape Panel. *As you're flattening the marked areas, "feather" them out by working from all four sides of the panel.*

READING A PANEL

First, I look over the entire surface of the panel. If I notice a bump or a low spot (such as planer chipout created at the sawmill or lumberyard), I rub my hand over it to determine the size of the defect, see Fig. 1.

Then I scribble over any areas that feel rough with a pencil, see Fig. 2. After the panel is marked, it's ready to be smoothed.

If the marked areas are higher or deeper than 1/32", or if the panel has a lot of chipout, I'll use the belt sander.

If the panel was glued-up reasonably flat, I go right to the hand scraper. ("Reasonably" flat to me means the high and low spots are no higher or deeper

than 1/32", with minimal chipout throughout the panel.)

HAND SCRAPER

When a hand scraper is sharp, it's easy to control — and it can remove material quickly. The shavings should curl right off. Just as they do for a sharp hand plane.

SCRAPING TECHNIQUE. When starting out with the scraper, first place it on edge on the marked area that needs to be smoothed, see Fig. 3. The gap under the scraper will give you an approximate idea of how much material needs to be removed.

When scraping, tilt the blade in the direction you're scraping, see Fig. 4. Generally I push the scraper away from me. But I'll occasionally pull it towards me if it feels more comfortable. (It all depends on where I'm standing in relation to the area I'm working.)

Also, I skew the blade at a 45° angle to the grain of the wood, see Fig. 4. This produces more of a slicing action — the scraper slices off the wood fibers cleanly, rather than ripping or pulling them out. And when I want to remove a lot of material quickly, I'll flex the scraper in the center with my thumbs while pushing it across the panel.

As I'm scraping, I don't usually stand in one place. Instead, I work my way around all four sides of the panel, scraping from different directions. (But I never hold the scraper parallel to the grain.) This allows me to "feather" out the high and low spots.

CHECK PROGRESS OFTEN. Whenever I'm smoothing a panel (whether it's with the scraper or belt sander), I'm continuously stopping to check my progress. Every 15 or 20 seconds I'll stop and feel the panel. I can't overstate how important this is in getting the panel smooth and flat.

If I find an area that needs more work, I go back over it until it's flat. Then I move on. The important thing here is to avoid overworking an area. You don't want to remove too much material.

After you're satisfied with the flatness of the panel, it's ready to be finish-sanded.

BELT SANDER

Okay, so when do I use a belt sander? I'll use one if there's a lot of material to remove, or a lot of chipout.

GRAIN DIRECTION. When using the belt sander (with a 100 to 120 grit belt) I generally sand with the grain (by following the tips described in the box below). But if there's a lot of material to remove, I'll sand at a 45° angle to the grain.

Just keep in mind that you'll remove more material faster by angling the sander. You'll also end up with scratches that are more noticeable. So if you've sanded at an angle, sand the area one more time with the grain to clean up any scratches.

DON'T OVER-SAND. Once all the ridges, chipout, and planer marks have been removed, stop sanding. Don't try to do too much with the belt sander. A belt sander is a workhorse; it's not meant to be used as a finish sander.

FINISH BY SCRAPING. Then, to complete the smoothing process, scrape the belt sanded areas one more time with the hand scraper. This way, any scratches missed (or caused) by the belt sander are removed.

FINISH SAND. Once the panel is smooth, I finish-sand it with my palm sander or random orbit sander (with 180 grit sandpaper).

Finally, just before applying the finish, I sand the entire project with a sanding block, using 220 grit sandpaper.

PLANE OR SCRAPE?

A hand plane could be used in place of a cabinet (hand) scraper for smoothing a glued-up panel. But, the plane iron must be *extra* sharp and the plane must be adjusted *perfectly*. If they're not, you could end up tearing out the grain, or gouging the panel. With a scraper, it's less likely to happen.

Another reason I prefer a scraper is you don't have to be as concerned about the direction of the grain. With a plane you do. If you plane against the grain you could end up tearing out the grain.

So unless your plane is set up just right and you're able to read the grain, I recommend using a sharp scraper.

TIPS FOR USING A BELT SANDER

There are times when using a belt sander on a glued-up panel is appropriate. When I use one, it's usually when there's a lot of material to remove, or the panel has a lot of chipout.

LEVEL JOINT LINES. But before I break out my belt sander, I always first check the joint lines on a glued-up panel. If the joint lines are stair-stepped the least bit, I will knock off the sharp edges along each joint line with a cabinet (hand) scraper, see Fig. 1.

If the ridges on the joint lines aren't "knocked off," the belt sander could gouge the panel as it's crossing over each joint line, see Fig. 1a.

START SANDER ON PANEL. After I've made sure the joint lines are somewhat flat before belt sanding, the most important rule I follow is this: I *never* place the sander on the panel with the belt running. I always place the sander on the panel *before* turning on the power, see Fig. 2.

This way, the sander starts out flat on the panel. If a running sander is set down on a panel, and it doesn't hit the surface of the panel squarely, the sander could easily create a snipe or gouge the surface, see Fig. 2a. (And that's just about the last thing any woodworker wants to have happen to a glued-up panel.)

A word of caution though. Have a good hold on the belt sander when you start up, or it can run away from you. The first time you try this, it may seem as if the sander is jumping out of your hands. But after a few starts and stops, you'll get a feel for what to expect. And then it becomes natural.

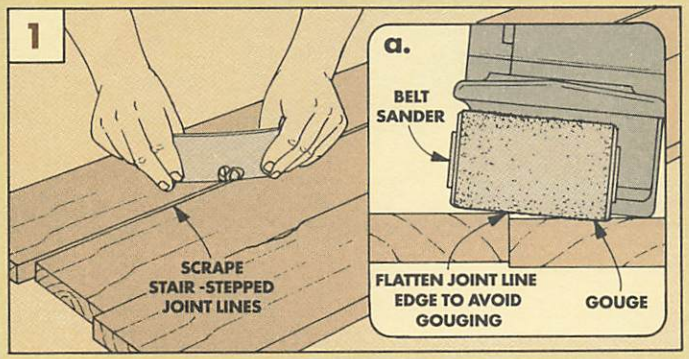

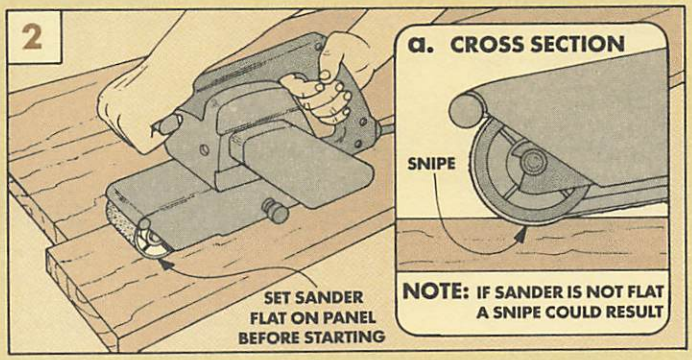

Craftsman Bookcase

You can build this Bookcase the same way the original Craftsman-style furniture was designed to be built — with a combination of machinery and handwork.

This Bookcase is a good example of Craftsman-style furniture. Sturdy mortise and through tenon construction, square pegs, and shop-made door pulls. The design is simple and straightforward.

When Gustav Stickley started designing furniture like this in the early 1900's, he had the "common man" in mind. Out with the ornate — furniture should be simple and functional. The result was the Craftsman (or Mission) style.

MACHINE AND HAND TOOLS. But Stickley was not just concerned with design. Furniture also had to be well-built in the tradition of the master craftsman. And his furniture was built with a combination of machinery and handwork.

I think that's what I like most about this cherry Bookcase. It's built in the same tradition. The heavy and repetitive tasks (the cutting, planing, and drilling) can be done by machine. The finer details (the through tenons, square pegs, and the door dividers) require some careful handwork. And the whole process reflects Stickley's concern for quality and craftsmanship.

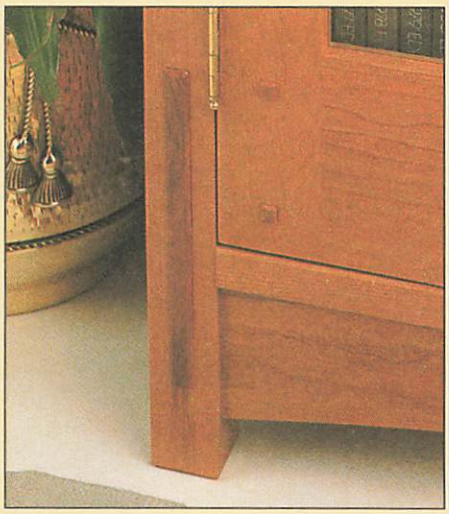

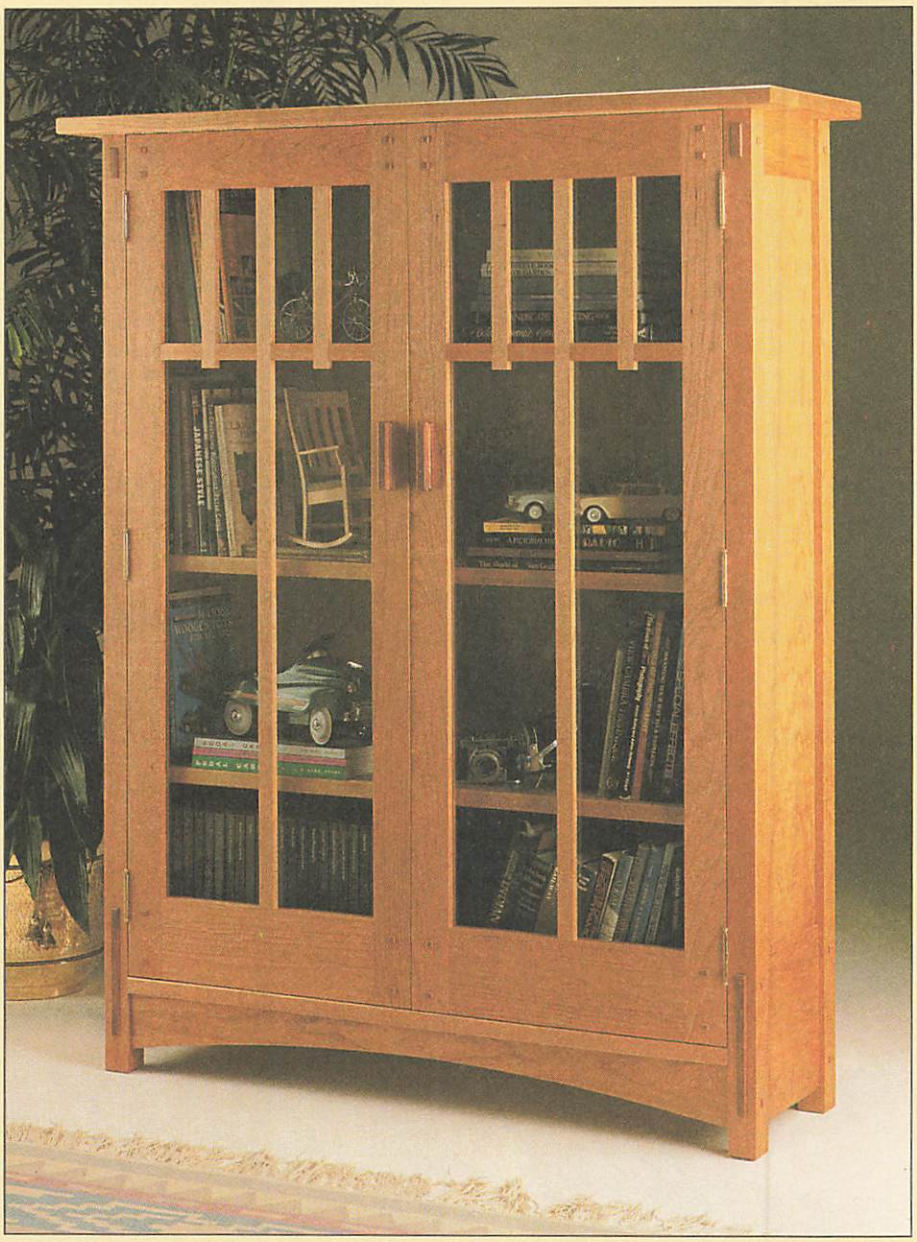

EXPLODED VIEW

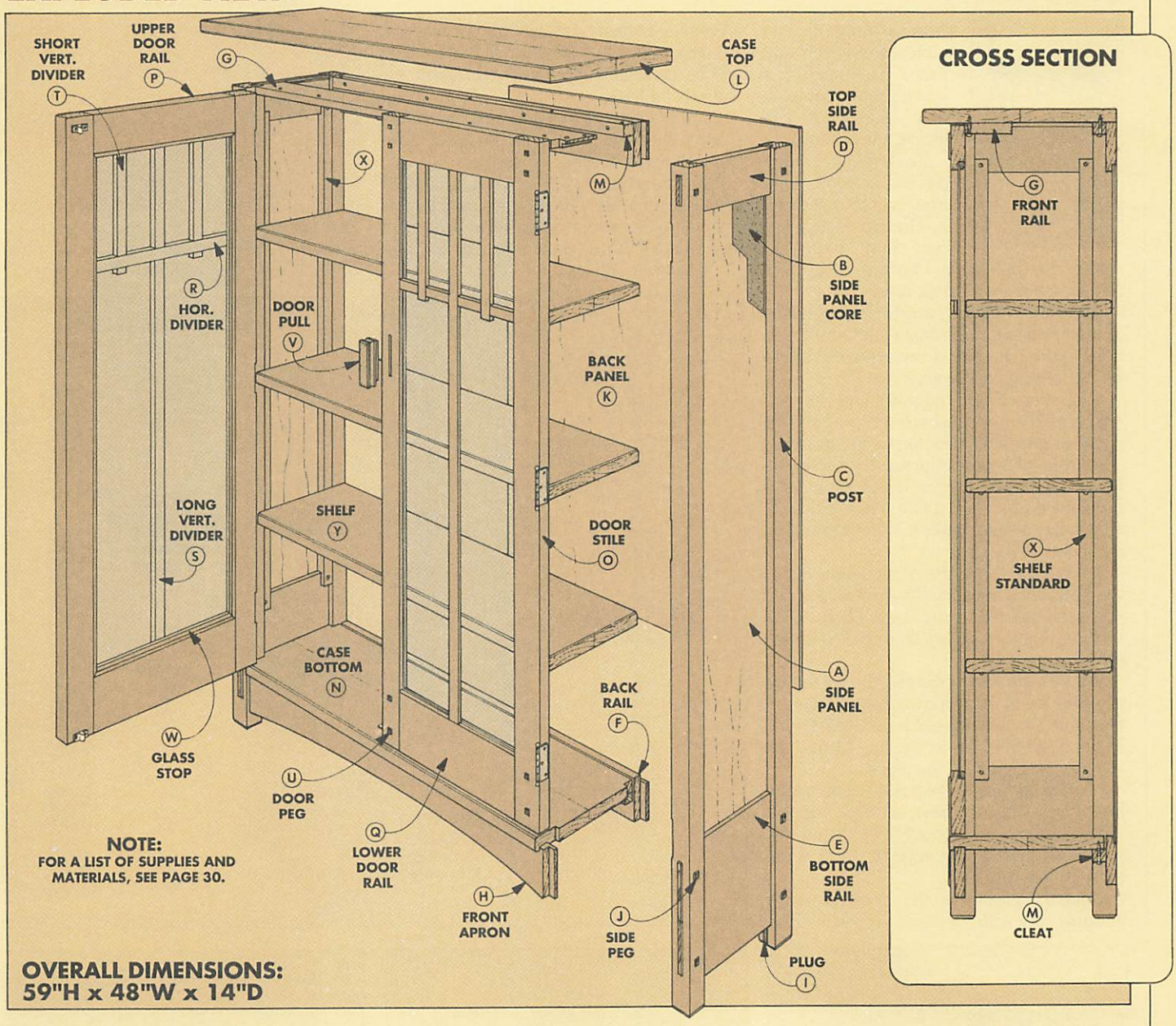

NOTE:
FOR A LIST OF SUPPLIES AND MATERIALS, SEE PAGE 30.

OVERALL DIMENSIONS:
59"H x 48"W x 14"D

PANELS

To build this Craftsman Bookcase, I started by making the framed side units. When making a framed panel, I generally use plywood for the panel. Unlike solid wood, plywood isn't drastically affected by seasonal changes in humidity.

I designed each side unit to have ½"-thick plywood panels with two good sides. (Both the inside as well as the outside of each panel can be seen.) But finding ½" cherry plywood with two good faces isn't easy. And it's quite expensive.

Instead, I cut two pieces of ¼" cherry plywood to make each panel, see Fig. 1. Then these **side panels (A)** can be set back-to-back so there are two good sides. Note: All the plywood pieces for this project can be cut from one 4x8 sheet of ¼" plywood.

But there's still a problem. Most ¼" hardwood plywood isn't ¼" thick. The plywood I used was a hair over 3/16". So to get the panels closer to ½" thick (they don't need to be exact), I sandwiched a ⅛"-thick piece of Masonite between the panels as a **side panel core (B)**, see Fig. 1 and the photo on page 22.

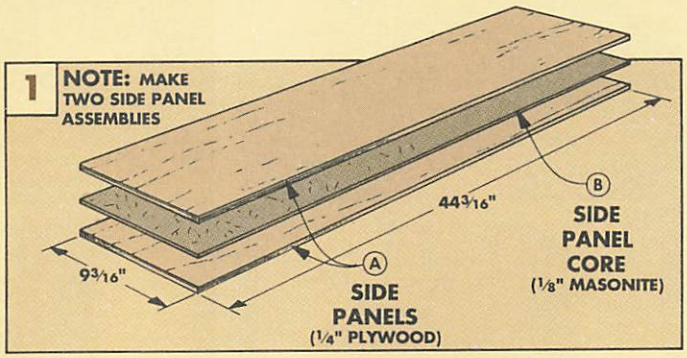

One other point. The three layers for each panel could be glued together. But you don't have to. The frames built around the panels will hold them together just fine.

SIDE UNITS

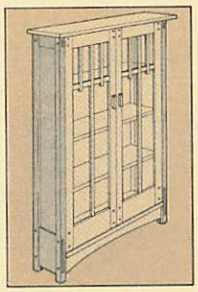

Now, a frame can be built around each side panel. The panel fits into a groove cut in all four pieces of the frame, see photo.

First, I cut all the pieces for both side frames to size, see Fig. 2. The **posts (C)** are cut from 1¾"-thick stock. The **top (D)** and **bottom side rails (E)** are cut from 1"-thick stock.

GROOVES FOR SIDE PANELS. The grooves in the posts and rails must match the thickness of the panel. And the grooves should be centered on each piece exactly.

Shop Note: Since the posts and rails are different thicknesses, each requires its own setup on the table saw to cut the grooves. Here, you have two options. Either reset the fence. Or keep the fence in the same position, but clamp a shim to it, refer to Fig. 5. (If you use a shim, make it *before* setting up to cut any of the grooves.)

To find the thickness of the shim, figure the difference between the thickness of the posts and rails (¾" in my case). Then, divide this number by two. My shim ended up ⅜" thick, see Fig. 5.

SET UP GROOVES. To set up the cut for the grooves, first I mounted a ⅜" dado blade in the table saw and raised it ⅜", see Fig. 3. Then I set the fence so the blade was *slightly* off-center on the piece.

I cut the groove in two passes, flipping the board between each pass, see Figs. 3 and 4. (This centers the groove exactly on the workpiece.) Note: Be sure to use a scrap piece to test the setup.

Once the groove is cut, check the width of the groove with the panels. If you need to, adjust the fence and make another test cut. But remember, any adjustment to the fence will be doubled when you flip the piece for the second pass.

CUT GROOVES. When the test piece fits snug around the panels, cut the grooves on the four posts, see Figs. 3 and 4.

Next, cut the grooves in the top and bottom side rails, see Fig. 5. Again, you'll have to change the setup. Either reset the fence. Or add the shim you made earlier, see Shop Note above and Fig. 5.

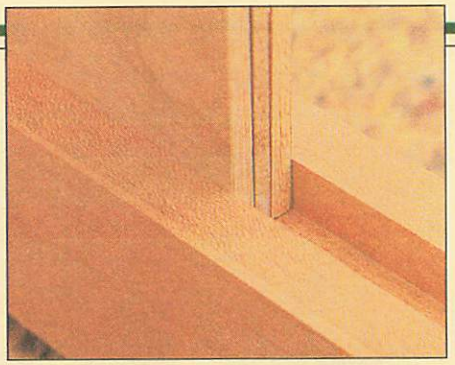

The three layers of the side panel aren't glued together. Instead, a groove centered in each frame piece holds them in place.

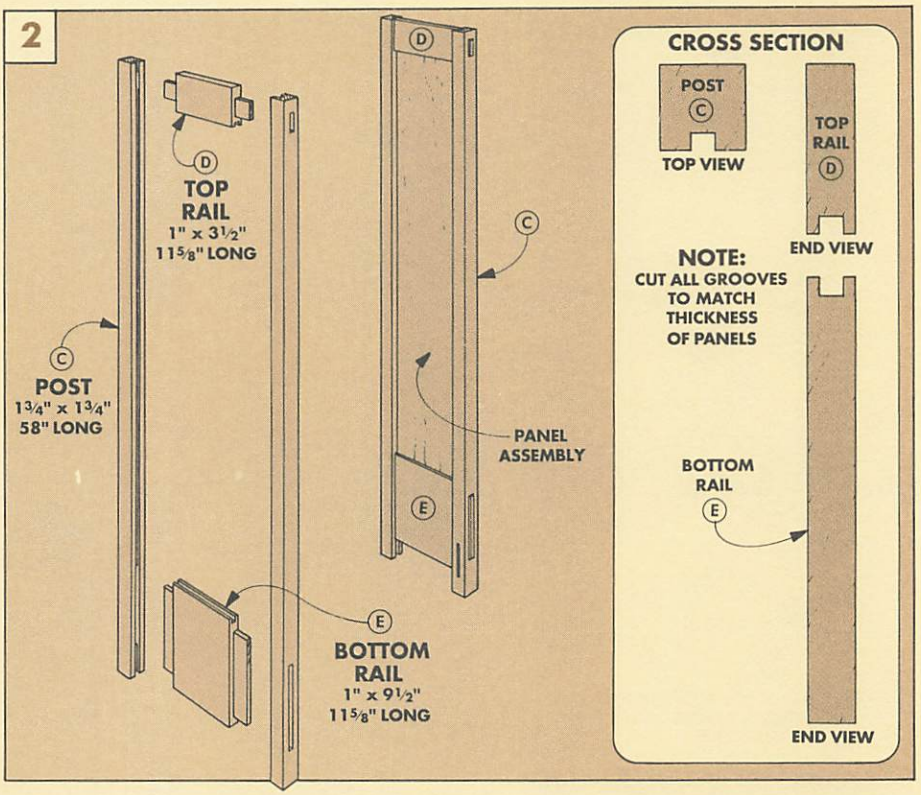

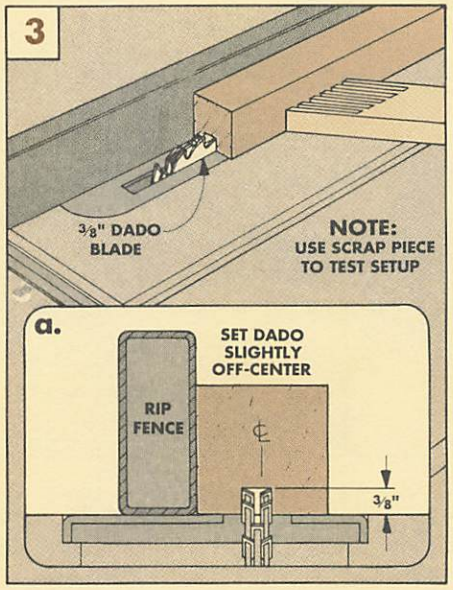

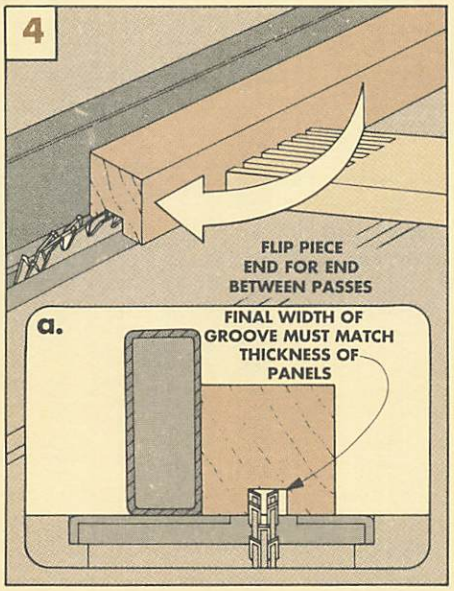

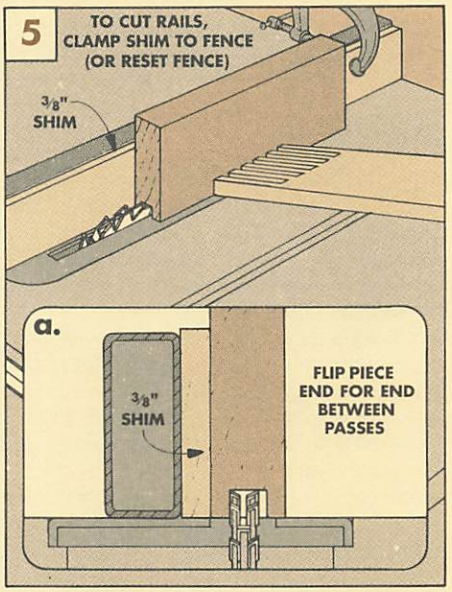

TENONS

Like a lot of Craftsman-style furniture, this Bookcase has mortises and through tenons. These demand careful handwork, but you actually get to see the joints. (For more on this joint, see page 13.)

I usually start with the mortises. But this time, I worked backwards. The tenons are cut first to fit the grooves (already cut in the posts). Like a mortise, the grooves act as a gauge for sizing the tenons, see photo.

TWO TENONS. There are two different-length tenons on each of the rails, see Fig. 6. On the front end is a long tenon that fits all the way through the front posts. But the tenon in back is shorter. It stops short in a typical (blind) mortise.

TWO STEPS. The setup for both the top and bottom rails is the same, see Figs. 7 and 8. Each tenon is cut in two steps. First, cut the cheek of the tenon, see Step 1. Note: Use a scrap piece and test the thickness of the tenons with the grooves in the posts.

Next, set the piece on edge and cut the tenon to width, see Step 2.

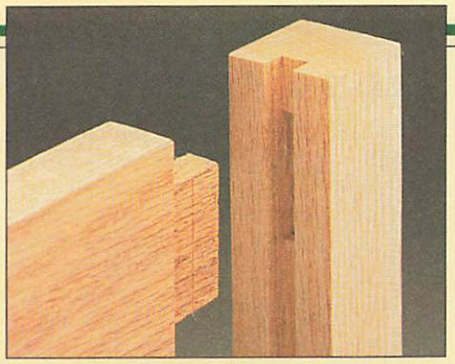

The grooves for the side panels are used to size the tenons. Then a shop-made jig fits the mortises to the tenons, see page 10.

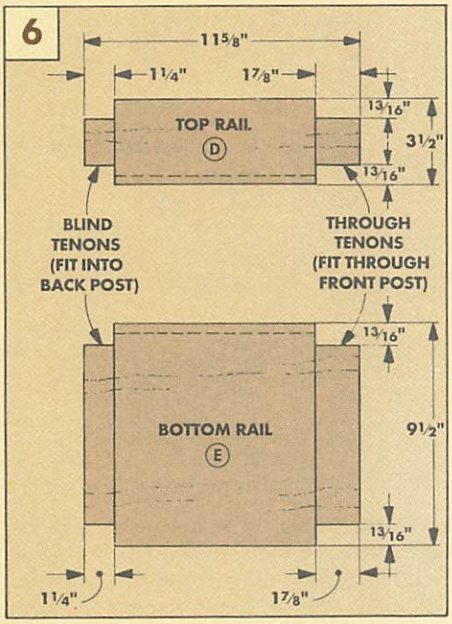

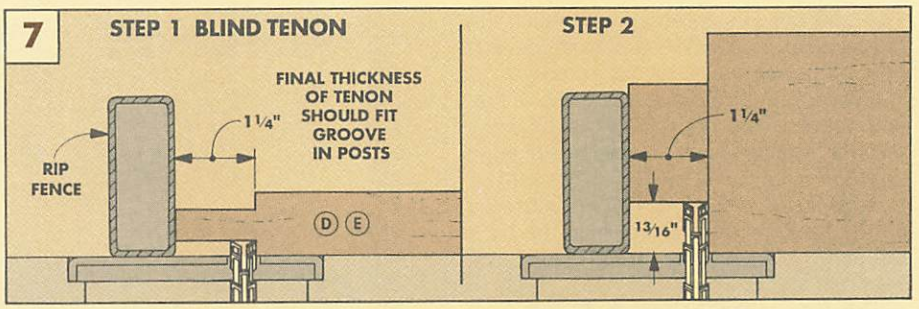

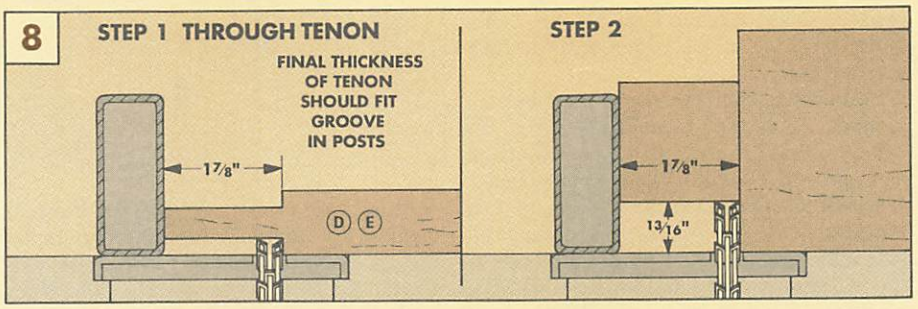

MORTISES

After all the tenons are cut on the rails, it's time to cut the mortises in the posts to accept the tenons. Again, there are two types of mortises — through and blind.

All the mortises are the same width as the grooves for the panels. This makes the setup easy. Just position the post so a ½"-dia. drill bit is centered in the groove. Then clamp a fence to the drill press table so it's against the post. (To clean up the mortises, I built the jig shown on page 10.)

BLIND MORTISES. After laying out each mortise, I drilled the blind ones in the back posts first, see Fig. 9. (Drill them 15/16" deep. This allows 1/16" for excess glue.)

THROUGH MORTISES. When the mortises in the back posts are complete, drill the mortises through the front posts. Shop Note: To prevent chipout on the faces of the posts and inside the grooves, drill these mortises halfway through from both sides.

MORTISES FOR APRON. There's one more set of mortises to cut. An apron joins the two front posts at the bottom. It requires a 9/16"-deep mortise on the *inside* edge of both front posts, see Figs. 9 and 9a.

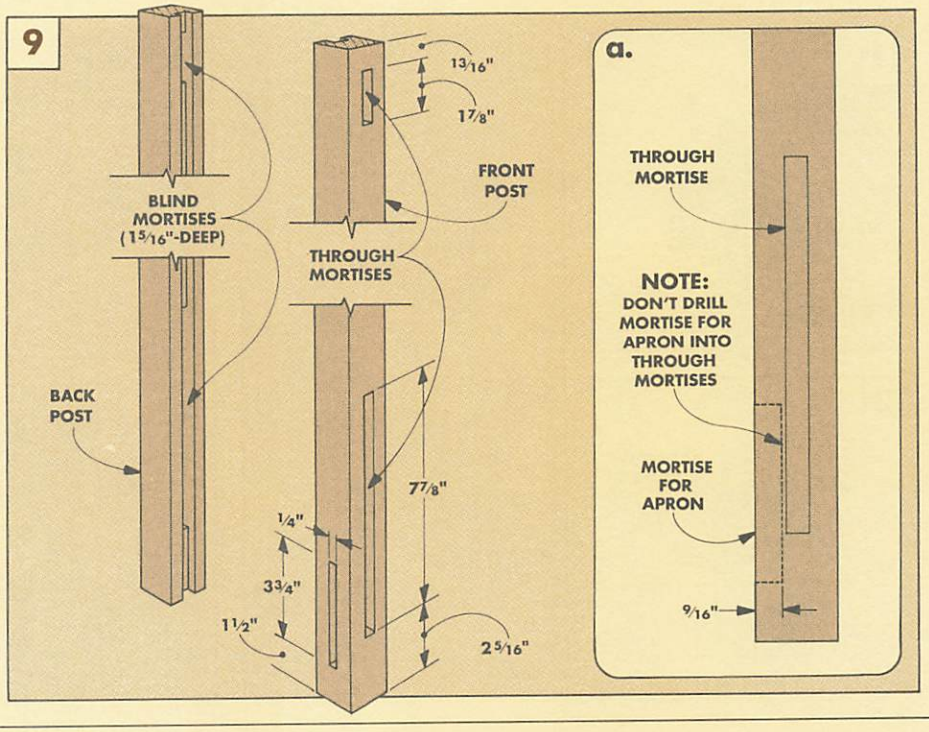

RAILS & APRON

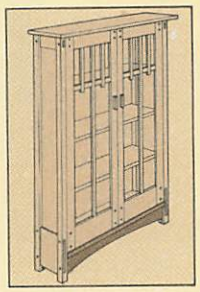

Before the side units can be put together, there must be some way to connect them. So I cut out the pieces that connect the units. Then cut rabbets and matching tongues.

CUT TO SIZE. Begin by cutting two **back rails (F)** and a **front rail (G)** to size from 3/4"-thick stock, see Fig. 10. Then cut out a **front apron (H).** (Note: The width of this apron should match the mortises in the posts — the apron doesn't have a top or bottom shoulder, see Fig. 15a.)

RABBETS. To hold these pieces, I rabbeted some of the side unit pieces. Each top rail (D) is rabbeted on the top inside edge to hold the front rail, see Figs. 10b and 11.

Then the two back posts (C) are rabbeted on the back inside edges to hold the back rail and the back panel (added later), see Figs. 10a and 12.

· The back rails (F) also hold the back panel in place, refer to Fig. 20a. So, I rabbeted the back inside edges of these rails too, see Fig. 13.

Shop Note: All these pieces don't end up identical — they're actually mirrored. So when cutting the rabbets, be sure to mark and rabbet the correct edge of each piece.

TONGUES. The next step was to cut tongues on the pieces that will connect the side units, see Fig. 10. Rabbet both ends of the two back rails (F) and the front rail (G), see Figs. 13 and 14. The remaining tongues should fit the rabbets you just finished cutting in the side pieces.

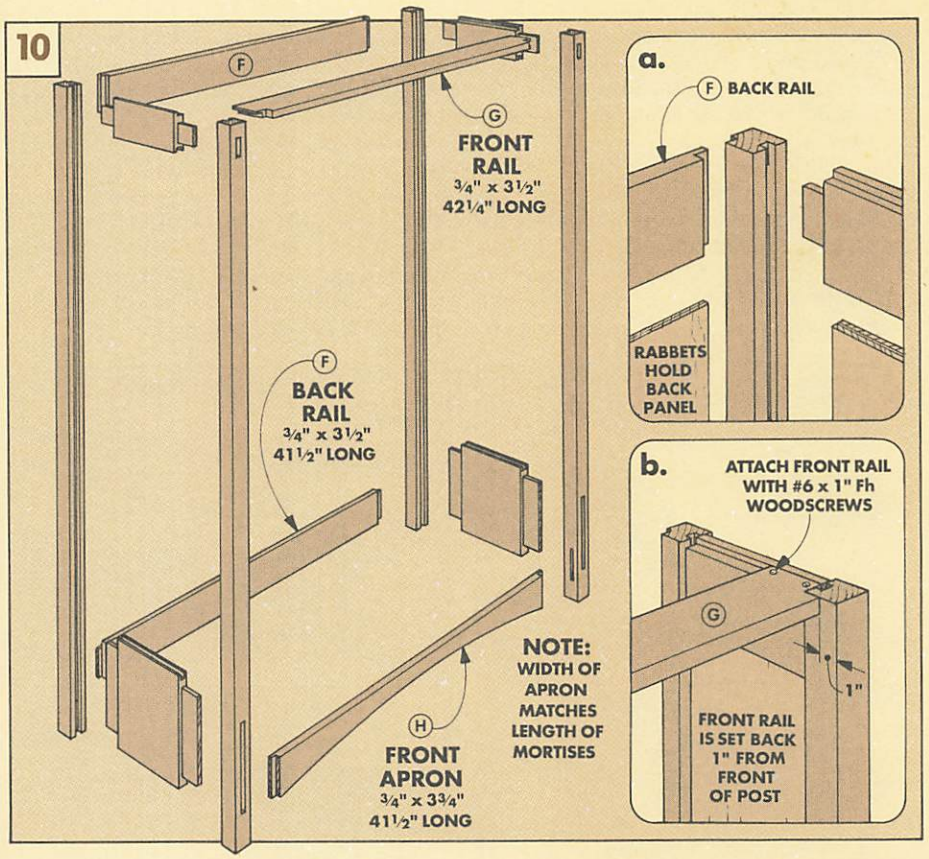

After these rabbets are cut, the front rail needs to be notched at the front corners, see Fig. 14. This notch allows the front rail to fit around the front posts, see Fig. 10b. When in place, the rail should set back 1" from the front. This allows the rail to act as a stop for the doors (added later).

RABBET APRON. The last piece to rabbet is the front apron (H), see Fig. 15. Again, you're creating tongues on the ends. But this time, they fit the mortises in the posts.

The apron also has a gentle arc on the bottom that can be laid out and cut at this time, see Fig. 15a.

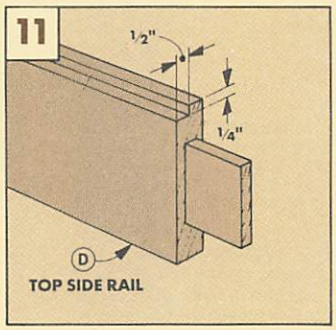

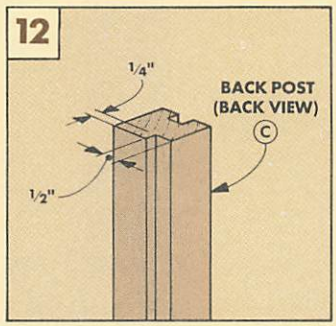

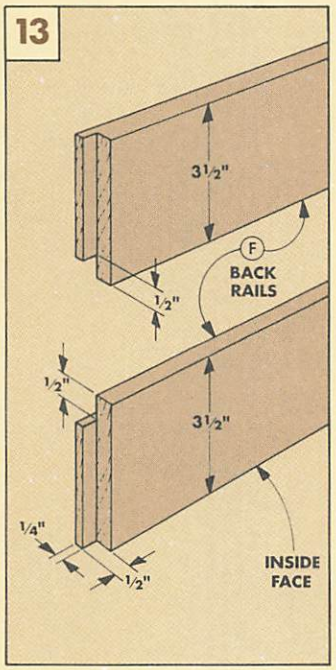

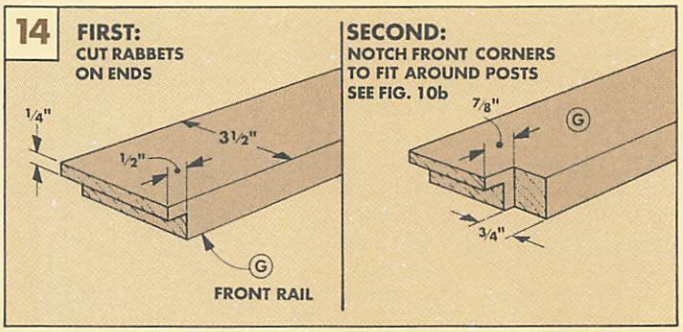

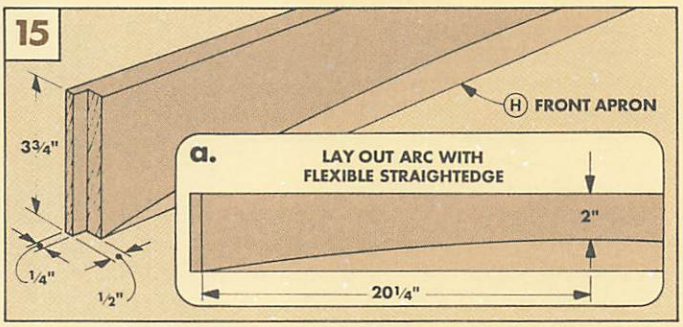

CASE ASSEMBLY

The Bookcase is almost ready to be assembled. But first, I added some small details.

The first step is to fill the grooves at the *bottom* of the posts, see Fig. 16. (The top of the posts will be covered by the case top later.) To do this, I cut a **plug (I)** to fit each groove. Note: Make sure you don't cover the mortises already cut in the posts.

CHAMFERS. The next step is to rout a 1/8" chamfer on the bottoms of all the posts, see Fig. 17. This has two benefits. It gives the posts a finished look, and it also minimizes chipout if the Bookcase is ever dragged across the floor.

Another thing I did was to chamfer the ends of *all* the tenons. This "dresses up" the through tenons, giving them a finished look. And on the tenons that fit the blind mortises, the chamfer allows room for excess glue.

SANDING BLOCK. There are a number of ways to chamfer the tenons, but I made a simple sanding block that chamfers both edges at the same time, see Fig. 18.

To make the block, I cut a groove in a piece of scrap with the dado blade set 3/8" deep. The width should equal the thickness of the tenon minus 1/8". (This will create a 1/16" chamfer on both sides of the tenon, see Fig. 18a.) Next, I tilted the blade 45° and beveled both sides of the groove.

To use the sanding block, stick adhesive-backed sandpaper on the beveled edges. Then sand the tenons, see photo. Check them often to make sure the chamfers are consistent. After the tenon "bottoms out" on the block, sand the top and bottom ends to match, using a regular sanding block.

ASSEMBLE SIDE UNITS. To assemble the case, I began by gluing up the side units, see Fig. 19. (For a tip on this, see page 17.)

PIN TENONS. After both side units are assembled, their tenons can be pinned, see Fig. 19a and the box on page 15. First, drill and square up the holes. Next, cut **pegs (J)** to fit them. Then glue the pegs in place so they stand proud 1/8", see the tip on page 17.

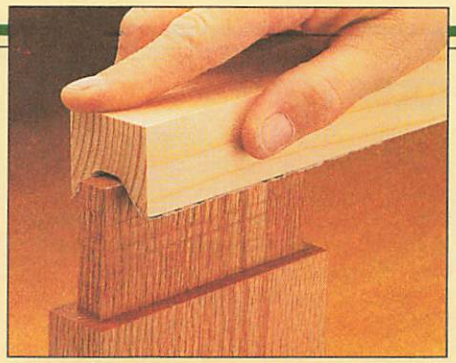

To "dress up" the through tenons, the ends are chamfered. A simple sanding block helps keep the chamfers consistent.

ASSEMBLE THE CASE. To connect the two side units, glue the front apron (H) between them and dry assemble all the other rails, see Fig. 20. After the front apron dries, remove each of the rails and drill shank holes and pilot holes. Then screw them back in place, refer to Figs. 10b and 20a.

After the case is assembled, I cut a **back panel (K)** to fit in the rabbets in the back of the case, see Fig. 20.

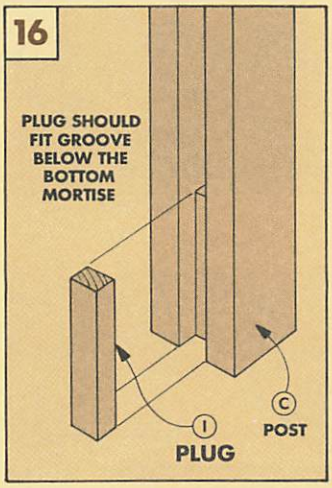

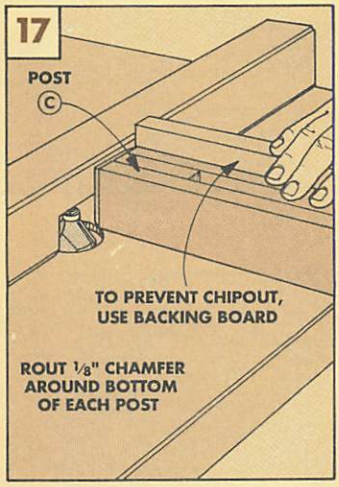

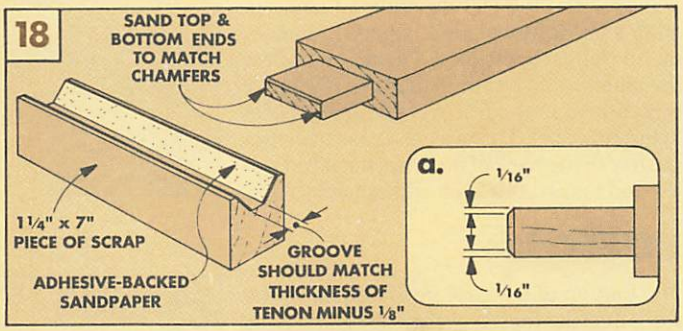

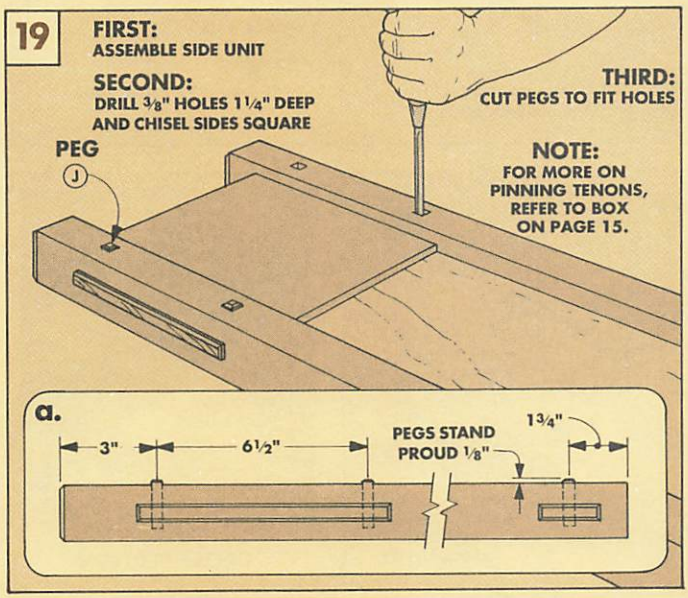

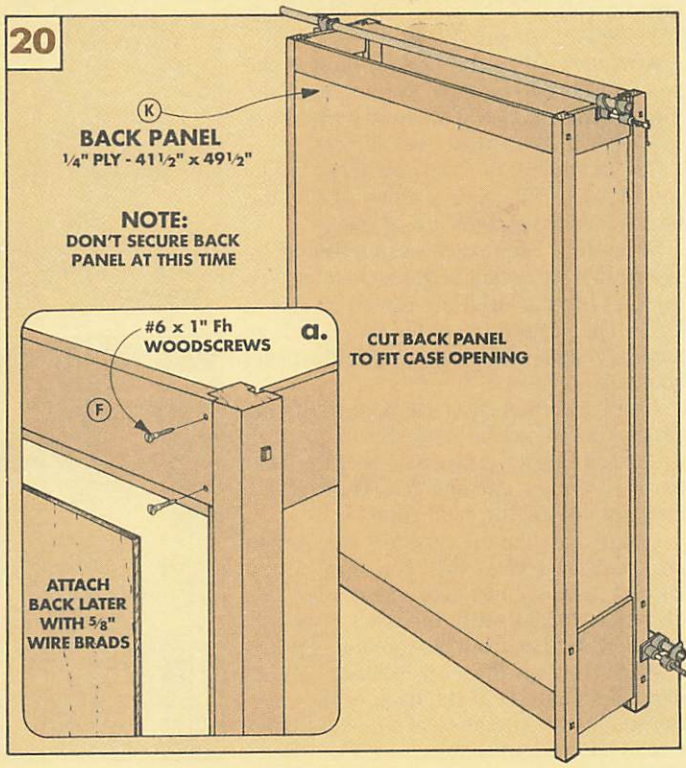

CASE TOP

The basic case is now complete. The next step is to add the top and bottom. Begin by gluing up enough 1"-thick stock to make both panels, see Figs. 21 and 24. (You could also glue up the adjustable shelves at this time, refer to Fig. 34 on page 29.)

Now, cut the **case top (L)** 4" longer and 2" wider than the case, see Fig. 21. Then rout a chamfer on the top and bottom edges (except the back), see Fig. 21a.

In the front, the case top is screwed directly to the front rail, refer to Fig. 23a. But before the top can be attached to the case, there needs to be a way to secure it at the back. The answer is a simple cleat.

CLEAT. First, cut the **cleat (M)** to fit between the back posts, see Fig. 22. (Make two — you'll use one for the bottom shelf later.) Then drill two sets of counterbored shank holes in the top cleat, see Fig. 22a. One set will be used to attach the cleat flush with the top edge of the back rail. The other will secure the top.

A 14"-wide top will expand and contract quite a bit with seasonal changes in humidity. So rather than fight it, I decided to allow the panel some freedom to move. The easy way to do this is to drill oversize shank holes in the *front* rail. This way, the case top stays flush with the back of the case, but it can still expand toward the front without splitting.

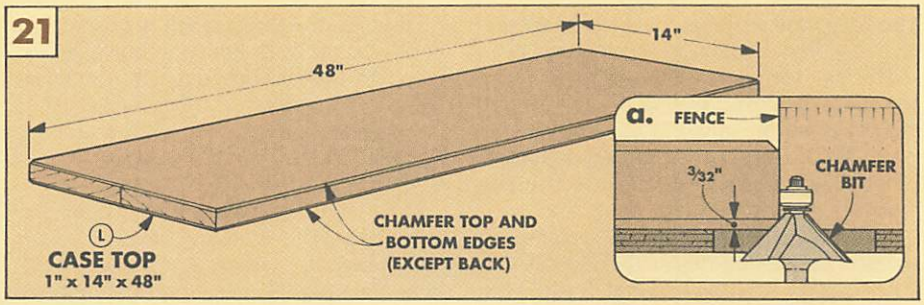

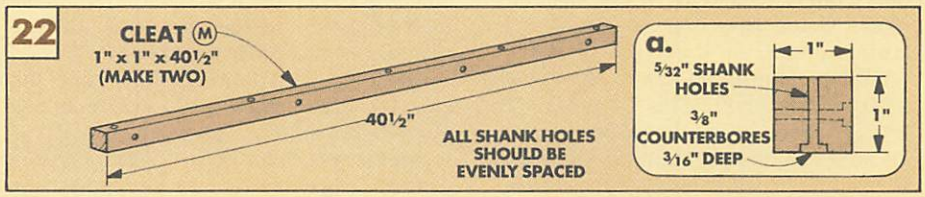

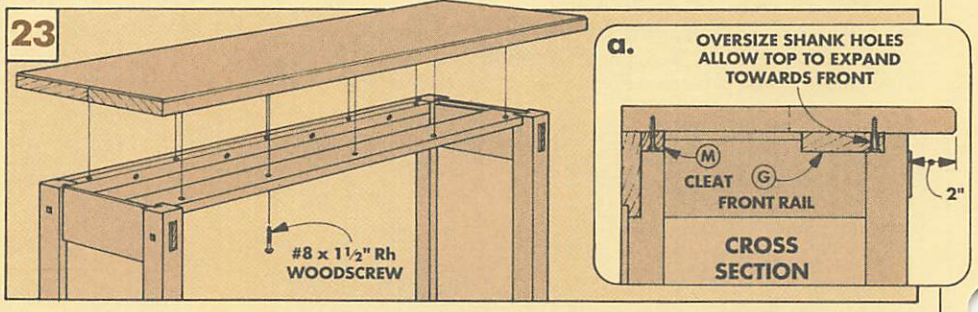

BOTTOM

The bottom of the case involves a bit more work than the top. Begin by cutting the **case bottom (N)** to fit between the side panels (A), see Figs. 24 and 25.

NOTCHES. To fit the bottom around the posts, each corner must be notched, see Fig. 25. The notches at the front corners are ⅛" *wider* than the posts, see Fig. 24.

The notches at the back are only 1" wide, see Fig. 24. This creates a tiny gap so the bottom can expand toward the *back*.

Shop Note: Because these notches will be visible, it's important to get a clean cut. To do this, I first scored them with an X-acto knife. Then I used the miter gauge with an auxiliary fence and cut them with the panel standing on edge.

GROOVE. When the case bottom fits between the posts, the next step is to cut a groove on its bottom face to fit over the front apron, see Figs. 24a and 25a. Then, rout a chamfer around the front edge.

CLEAT. Just like the case top, the bottom also requires a cleat (M), see Figs. 22 and 25. But there are two differences. First, the cleat isn't flush with the back rail. It's screwed 1" *down* from the top, see Fig. 25a.

Also, because the case bottom will expand and contract at the back of the case, the shank holes in the cleat should be oversize to allow for movement, see Fig. 25a.

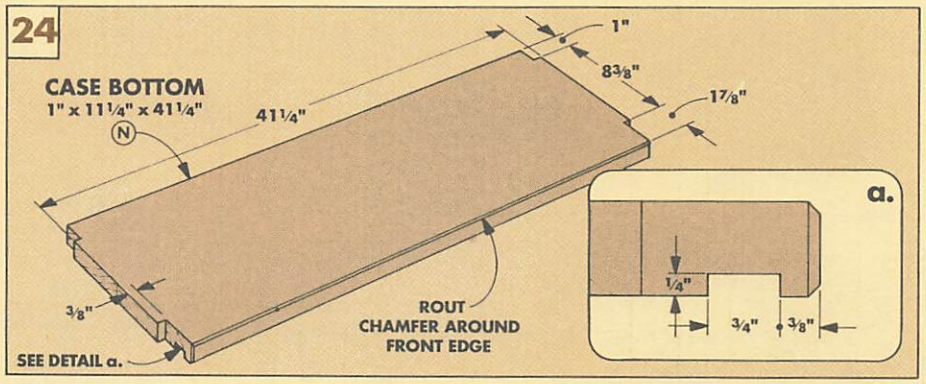

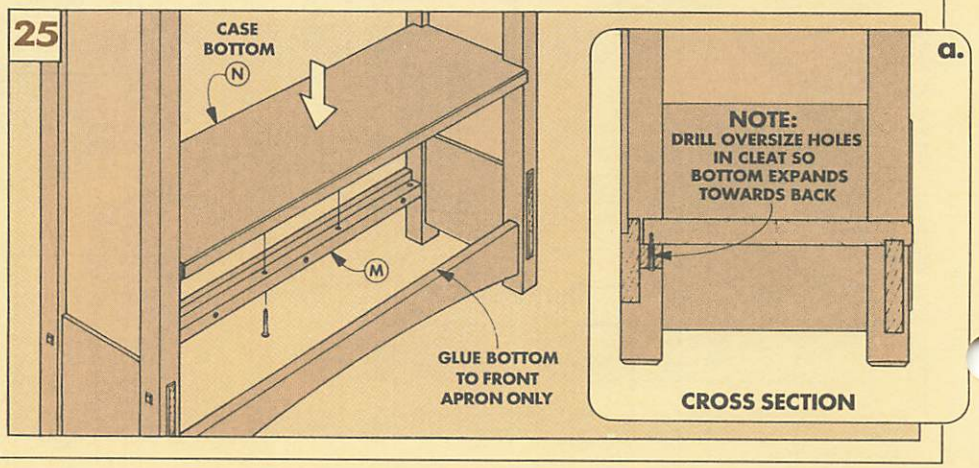

DOORS

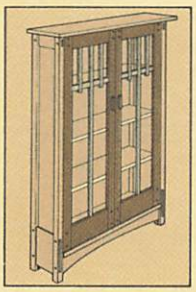

After the Bookcase has a top and bottom, you might want to add the shelves next. But it looks best if the top shelf hides behind the dividers in the doors. So it makes sense to build the doors first, then add the shelves.

FRAMES. To begin, cut 1"-thick **door stiles (O)** and the **upper (P)** and **lower door rails (Q)** to fit the case opening, see Fig. 26. Note: The final size of both doors should allow a 1/16" gap between the case and the doors on all four sides.

The door frames are joined together with mortise and tenons, see Figs. 26a and b.

After each door frame is assembled, I rabbeted the back, inside edge to hold the glass, see Fig. 27. Note: After routing, square up the corners with a chisel.

DOOR DIVIDERS. All the dividers in the doors are more for appearance than anything else. That's because the glass for each door is installed in one large piece — not individual panes, refer to Fig. 32.

To make the dividers, cut the 1/2"-thick **horizontal (R)** and **long vertical dividers (S)** to fit between the rabbets in the door frames, see Figs. 28 and 29. Then cut the **short vertical dividers (T)** to size.

HALF LAPS. The dividers are joined to the door frame and to each other with half laps, see Figs. 28a and b. So first, I rabbeted the ends of all the pieces. Note: Just rabbet one end of the short vertical dividers.

Next, I cut half laps in the horizontal dividers, see Fig. 28b. Then I cut the mating half laps in the vertical pieces. (These half laps are on the face *opposite* the rabbet.)

DIVIDER ASSEMBLY. Now, glue the dividers together. Then set the assembly in the rabbets in the door frame and mark the location of each divider, see Fig. 29.

To get the divider assembly flush with the *fronts* of the doors, you'll need to cut shallow mortises in the rabbets, see Fig. 29a. When the dividers fit in the door, they can be glued in place, see Fig. 29.

PEGS. To complete the doors, pin each tenon with two **door pegs (U)**, see Fig. 26. Note: These are shorter than the pegs (J) in the sides, but they still stand proud 1/8".

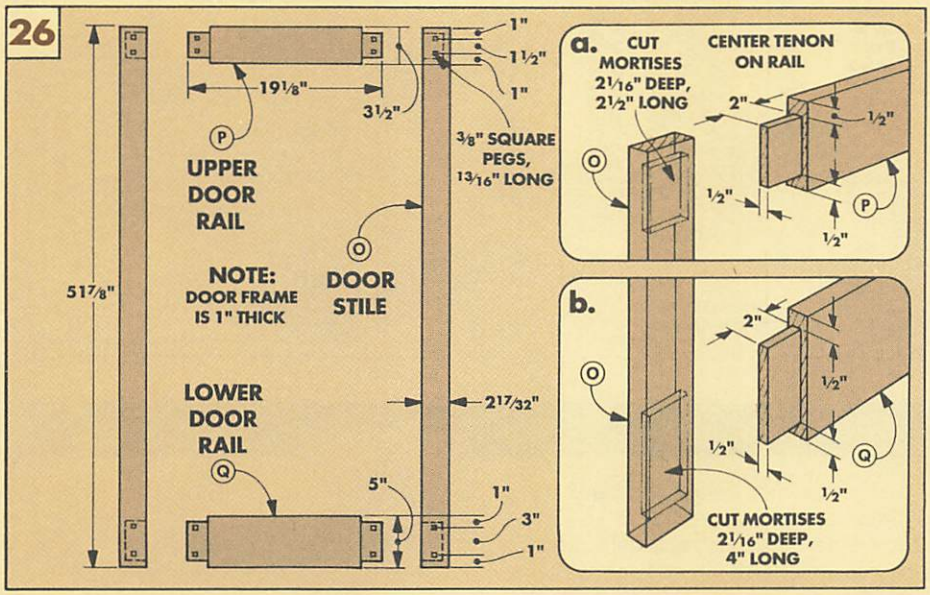

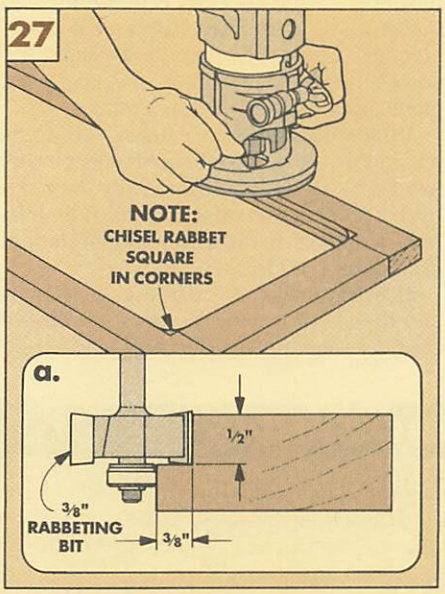

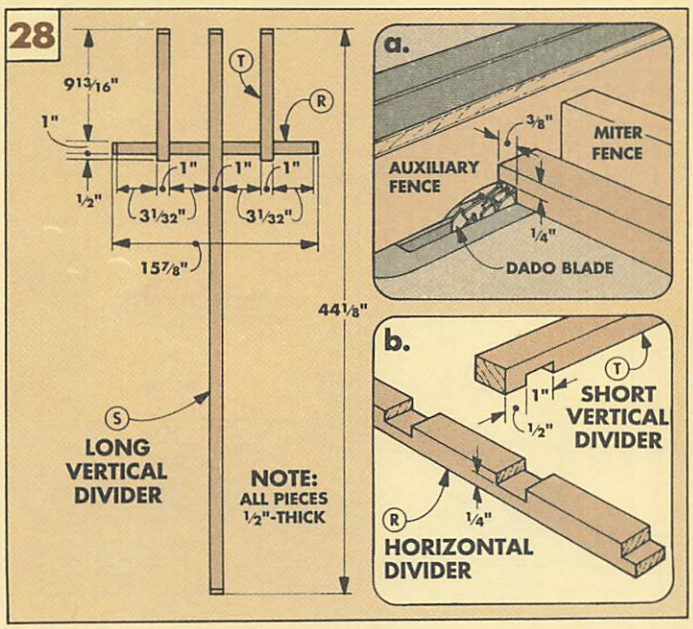

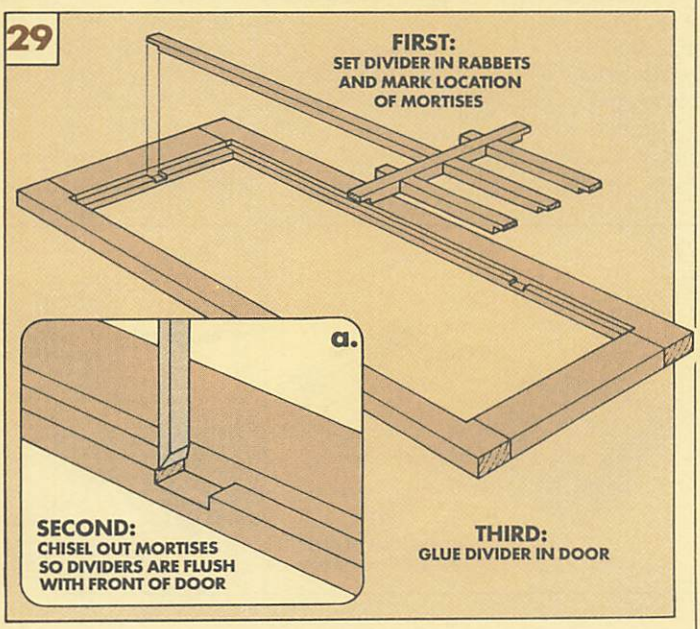

INSTALLING THE DOORS

At this point, the doors should fit with a 1/16" gap between the case and each door. The doors still need to be trimmed though — I didn't allow for any gap between them yet. I found it easier to mount the doors first and then trim them.

MOUNT HINGES. The hinges I used created a 1/16" gap when mortised and mounted flush with the posts and the doors. (For sources, see page 31.)

To mount the hinges, first lay out their locations on the posts and the doors, see Fig. 30. Then rout out most of the waste, and clean up the shoulders with a chisel.

After drilling pilot holes, install the hinges and mount the doors, see Fig. 30b.

TRIM DOORS. Now the center stiles of each door can be trimmed. To do this, determine how much needs to be trimmed to create a 1/16" gap. Then to keep the doors identical, I removed them and planed the same amount off each door. (I used a hand plane, but a jointer will also work.)

ADD CATCHES. Next, reattach the doors and mount the catches to hold them closed, see Figs. 30a and 30c. Since any door can have a tendency to twist, I installed double-ball catches at both the top and bottom of each door, see Fig. 30.

REMOVE DOORS. To add the door pulls and the glass, I found it easiest to remove the doors once again. But first, I marked the

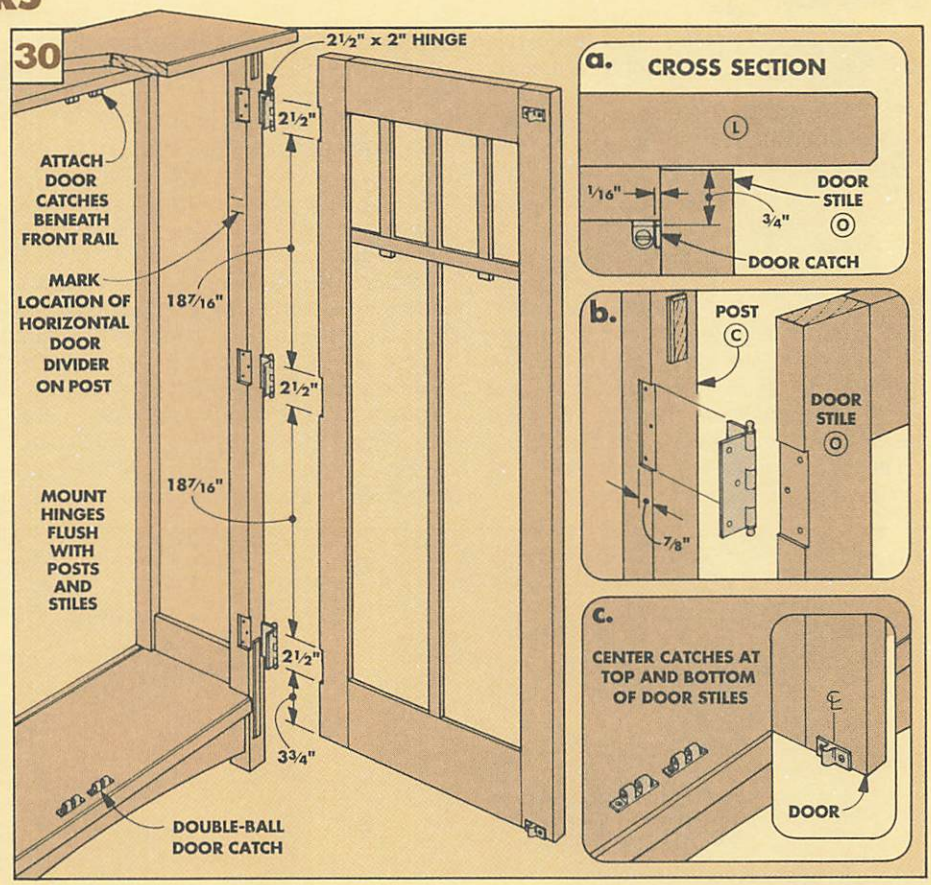

DOOR PULLS

Stickley's furniture company made all of its own hardware. While I didn't make my own hinges or door catches, I did make the door pulls for the Bookcase.

The pulls are cut from an extra-long blank of ¾"-thick cherry, see Fig. 1. (They're shaped at the ends of the blank.) The extra length makes the blank easy to work with and keeps your fingers out of harm's way.

The first step to shaping the pulls is to rout a chamfer around each end of the blank, see Fig. 2.

Next, rout a cove around the blank using a ½"-dia. core box bit, see Fig. 3.

Now, before cutting each pull from the blank, form a tenon to fit the mortises in the doors, refer to Fig. 31a on next page. Because the tenon is in the middle of the blank and not at the end, this cut looks a little odd. But it's not hard. Just cut or rout dadoes around the blank, see Fig. 4.

Note: With the tenon in the middle of the blank, it's impossible to test its fit in the mortise. So to ensure a good fit, I cut a tenon on a piece of scrap wood to test the setup.

All that's left now is to sand the pulls smooth and cut them from the blank. Then glue them into the mortises, refer to Fig. 31a.

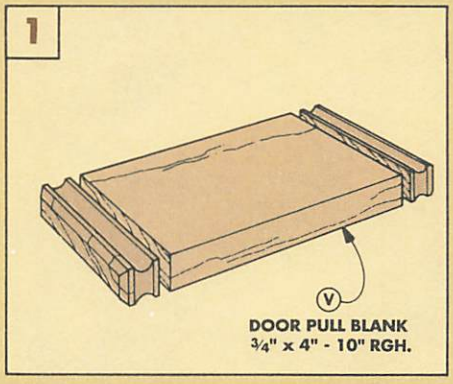

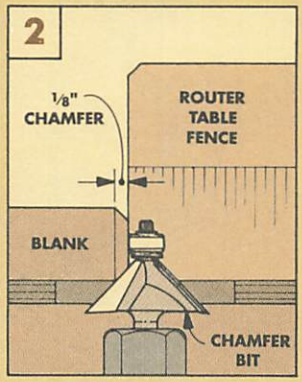

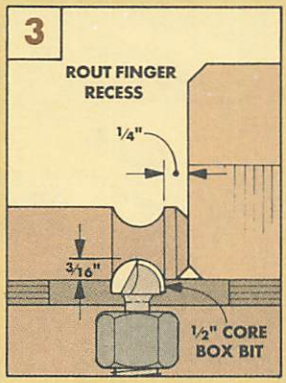

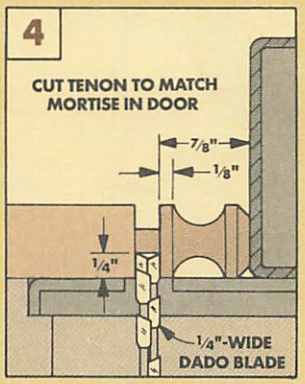

position of the horizontal dividers on the inside faces of the corner posts, see Fig. 30. (Later, these marks will show you where to position the top shelf.)

ADD DOOR PULLS. At this point I added the door pulls. To do this, first I cut a mortise in each door, see Fig. 31a. Then I made my own **door pulls (V)** (refer to the box on page 28) and glued them into the mortises.

GLASS STOPS. All that's left to add to the doors is the glass. Of course you don't want to add the glass until after the case has been finished, but now is a good time to cut the **glass stops (W).**

Before ripping the 3/8" x 3/8" glass stops to size, I first chamfered one edge, see Fig. 32a. This way, there's a flat face to nail the 5/8"-long wire brads into.

The glass stops are mitered at the corners, see Fig. 32. This makes it a little tougher if you have to remove the stops later, but miters look better than butt joints.

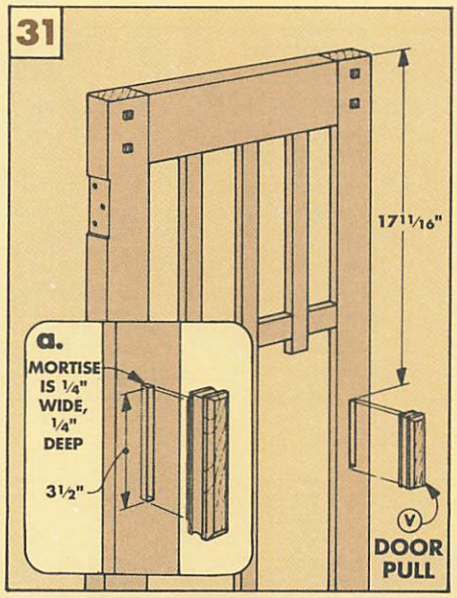

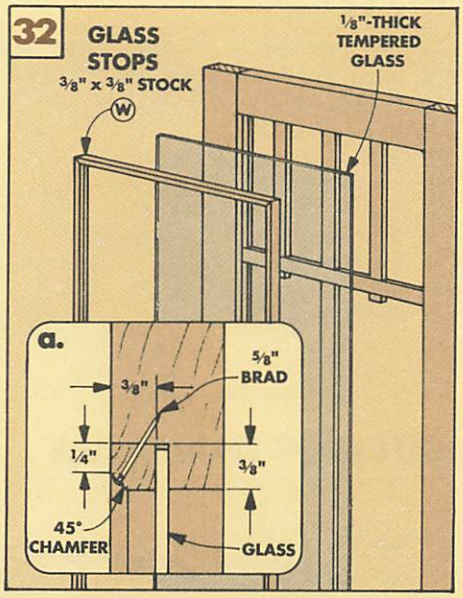

SHELVES & STANDARDS

You're almost done — the shelves are all that are left. They rest on spoon-style shelf pins that fit into shelf standards.

First, cut four 5/8"-thick **shelf standards (X)** to fit between the top and bottom side rails, see Fig. 33. Note: Add 2" for the rabbets that will be cut on the ends.

Now, cut a 1"-long rabbet on both ends of each standard, see Fig. 33a. Set the standards in place and mark the position of the top shelf, see Fig. 34. (It should line up behind the horizontal door dividers.)

SHELF PIN HOLES. Before attaching the standards to the sides, drill the holes for the shelf pins, see Fig. 33. (You can drill additional holes if you want. This will allow you to adjust the shelves later.)

SHELVES. For the **shelves (Y)**, glue up three 1"-thick shelf blanks and cut them to fit between the corner posts, see Fig. 34. Finally, chamfer the top and bottom edges and set the shelves in place.

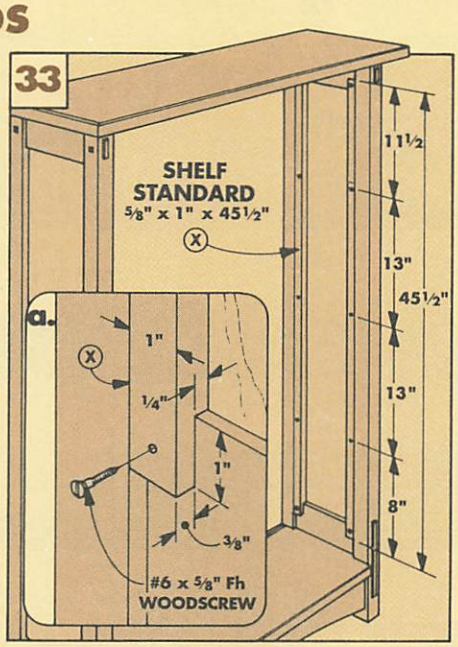

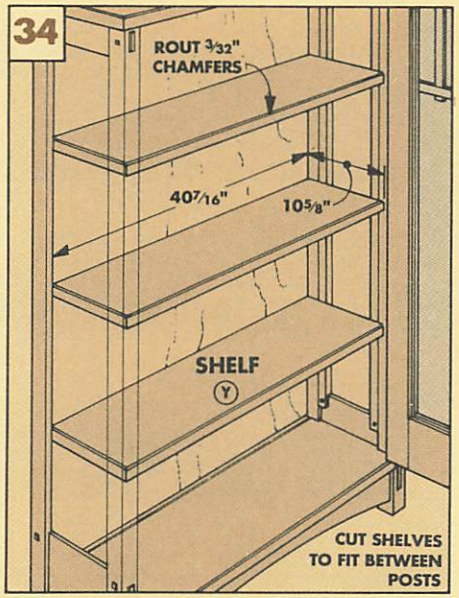

FINISHING

To protect the Bookcase, I brushed on four coats of General Finishes' Royal Finish (Satin). (For sources, see page 31.) This may sound like a lot of work, but it isn't. The oil/urethane mixture is easy to apply.

I usually brush on Royal Finish with a foam brush, but you can also wipe it on with a rag. Just apply a generous amount of the finish to the Bookcase, working in sections. Then wipe off the excess with a clean rag (always wipe with the grain). I also lightly sand between coats with 600-grit sandpaper. (Steel wool will also work.)

While the finish on this Bookcase isn't an authentic Craftsman finish, I did follow Stickey's technique in one way. I waxed the Bookcase after the finish had set a few days (to give it time to fully cure).

I applied several coats of a paste wax that was a mixture of carnauba wax and beeswax. (For sources, see page 31.)

To apply the wax, wipe on a thin layer with a cotton cloth and let it dry for a few minutes. (Several thin coats are easier to apply than one thick one.) Then buff it to a shine with a soft, clean cloth.

After applying an oil/urethane finish to the Bookcase, I waxed it to add luster as well as another thin layer of protection.

MATERIALS

A	Side Panels (4)	¼ ply - 9 3/16 x 44 3/16	N	Case Bottom (1)	1 x 11¼ - 41¼
B	Side Panel Cores (2)*	⅛ - 9 3/16 x 44 3/16	O	Door Stiles (4)	1 x 2 17/32 - 51⅞
C	Posts (4)	1¾ x 1¾ - 58	P	Upper Door Rails (2)	1 x 3½ - 19⅛
D	Top Side Rails (2)	1 x 3½ - 11⅝	Q	Lower Door Rails (2)	1 x 5 - 19⅛
E	Bottom Side Rails (2)	1 x 9½ - 11⅝	R	Horizontal Dividers (2)	½ x 1 - 15⅞
F	Back Rails (2)	¾ x 3½ - 41½	S	Long Vert. Dividers (2)	½ x 1 - 44⅛
G	Front Rail (1)	¾ x 3½ - 42¼	T	Short Vert. Dividers (4)	½ x 1 - 11 5/16
H	Front Apron (1)	¾ x 3¾ - 41½	U	Pegs - Doors (16)	⅜ x ⅜ - 13/16
I	Plugs - Posts (4)	⅜ x ½ - 2 5/16	V	Door Pulls (2)	¾ x 1⅛ - 4
J	Pegs - Sides (12)	⅜ x ⅜ - 1 5/16	W	Glass Stops (1)	⅜ x ⅜ - 20 ft. rgh.
K	Back Panel (1)	¼ ply - 41½ x 49½	X	Shelf Standards (4)	⅝ x 1 - 45½
L	Case Top (1)	1 x 14 - 48	Y	Shelves (3)	1 x 10⅝ - 40 7/16
M	Cleats (2)	1 x 1 - 40½			

* Cut from ⅛"-thick Masonite

SUPPLIES

- (12) #6 x 1" Fh Woodscrews
- (23) #8 x 1½" Rh Woodscrews
- (8) #6 x ⅝" Fh Woodscrews
- (3 pair) 2½" x 2" Ball-Tipped Hinges
- (4) Double-Ball Door Catches
- (12) Shelf Pins
- (2) 15¾" x 44" Glass Panes*
- (100) ⅝" Wire Brads

***Note:** For this Bookcase, I used ⅛"-thick tempered glass. Have the glass cut to fit the opening on the back of each door, minus ⅛" in both length and width, so it will fit easily.

CUTTING DIAGRAM

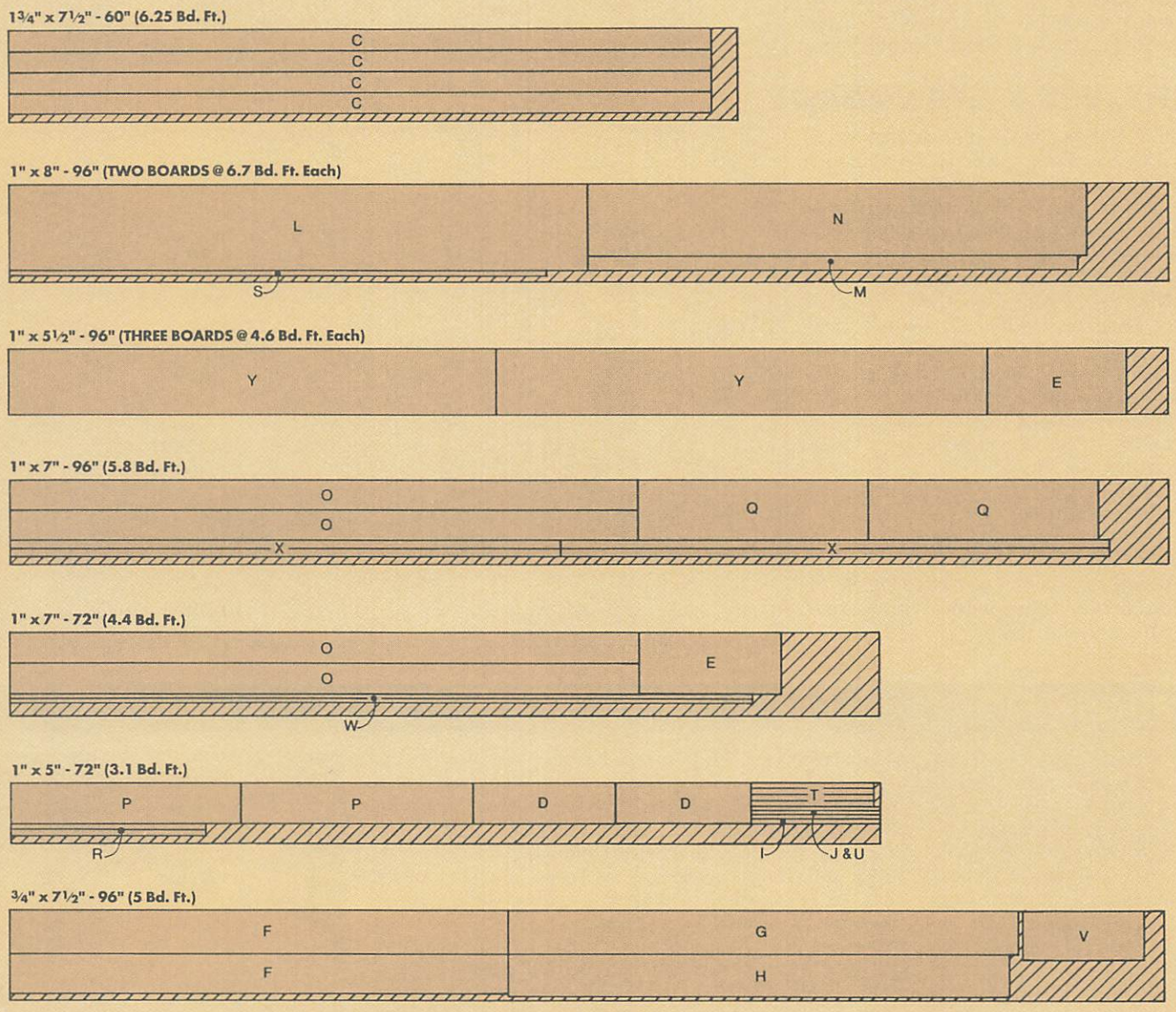

ALSO NEED: One 4x8 Sheet ¼" Plywood, plus One 2x4 Sheet ⅛" Masonite

Sources

QUILT RACK

A complete hardware kit for the Quilt Rack, shown on page 6, is available from *Woodsmith Project Supplies*, see photo. The oak dowel and the galley spindles are included, but you'll have to supply the rest of the wood.

Note: If you're buying hardware from other sources, keep these things in mind.

First, any galley spindles you purchase will probably be slightly different than the ones shown here and on page 6. That's okay. Just make sure the holes you drill match the diameter and length of the tenons on your galley spindles.

Also, the hardware, the galley spindles, and the oak dowel are listed separately in the Mail Order Sources below. Note: Although the compression spring used for the Quilt Rack isn't available through any of these catalogs, springs like these are usually available through local hardware stores.

W90-790-100 Quilt Rack Hardware Kit $11.95

- (1) Red Oak Dowel, 1¼" x 48"
- (16) Red Oak Galley Spindles, 9/16" x 1½" (overall length)
- (2) Red Oak Plugs, ⅜"-Dia.
- (2) Brass-plated Hanger Plates with Screws
- (1) Compression Spring, ¾"-Dia. x 3" Long

CRAFTSMAN BOOKCASE

Woodsmith Project Supplies also has a complete hardware kit available for the Craftsman Bookcase shown on page 20. This kit does not include the wood or the glass.

W90-790-200 Bookcase Hardware Kit $59.95

- (3 pair) Brass Ball-tipped Hinges, 2½" (long) x 2" (open width)
- (4) Brass Double-Ball Catches with Screws
- (12) #6 x 1" Fh Woodscrews
- (23) #8 x 1½" Rh Woodscrews
- (8) #6 x ⅝" Fh Woodscrews
- (100) ⅝" Wire Brads

FINISHES

We stained the Quilt Rack with Minwax's Golden Oak. Minwax products are available through many retail stores and the catalogs listed below.

For both of the projects in this issue, we used a General Finishes' oil/urethane finish as a top coat. These are available from *Woodsmith Project Supplies* and the catalogs below.

W90-4003-601 Sealacell Sealer (Clear) ..... $11.95 quart

W90-4003-602 Royal Finish Top Coat (Satin) ... $11.95 quart

WAXES. To give the Bookcase another layer of protection, we applied several thin coats of paste wax, see the sources below. There are many different brands of paste wax available, but we prefer one that contains carnauba.

HAND SCRAPERS

A cabinet (hand) scraper is a great tool for smoothing boards or panels. (See the article on page 18.) But it's also great for removing burn marks on an edge or ripples left by a planer.

We've recently developed our own 3-piece scraper set. What makes these scrapers different is the steel. Each is made from tempered steel with a hardness of RC 50. (Most scrapers are RC 38-42.) This makes them much harder, which means less sharpening and longer lasting edges.

The set consists of two different straight scrapers (.025" and .035" thick) and a gooseneck profile scraper (.035" thick).

W90-5005-160 3-Piece Scraper Set $12.95

SHARPENING JIGS. If a scraper isn't sharp, you'll end up with sawdust, not paper-thin shavings. To get a scraper sharp, you need a mill file and a burnisher. Both are available through *Woodsmith Project Supplies* and the catalogs listed below.

If you'd like help with the sharpening process, *Woodsmith* No. 39 has plans for a shop-made sharpening jig and instructions for using a scraper.

W90-39 *Woodsmith* Issue No. 39 ..... $3.95

W90-5001-103 10" Smooth Mill File $8.95

W90-5005-105 Hardened Steel Burnisher $9.95

Also available from *Woodsmith Project Supplies* is a new Scraper Sharpening Jig that we designed ourselves. Made from extruded aluminum, it includes a mill file and burnisher. And it comes with step-by-step instructions to guide you through the sharpening process.

W90-5005-150 Scraper Sharpening Jig $29.95

WOODSMITH PROJECT SUPPLIES

ORDER BY MAIL

To order by mail, use the order form that comes with the current issue. The order form includes information on sales tax as well as shipping and handling charges.

If the mail order form is not available, please call the Toll Free number at the right for more information on specific charges and any applicable sales tax.

ORDER BY PHONE

For fastest service use our Toll Free order line. Open Monday through Friday, 7 AM to 7 PM Central Time.

Before calling, please have your MasterCard, VISA, or Discover Card ready.

1-800-444-7527

Note: Prices subject to change after February, 1994.

MAIL ORDER SOURCES

Similar hardware and supplies may be found in the following catalogs. Please call each company for a catalog or information.

Constantine's
800-223-8087
Paste Wax, Scrapers & Burnishers

Craftsman Wood Service
800-543-9367
Paste Wax, Minwax Stains

Van Dyke's
800-843-3320
Quilt Rack Hardware, Galley Spindles, Paste Wax, Mill File

Woodcraft
800-225-1153
Quilt Rack & Bookcase Hardware, Galley Spindles, Scrapers & Burnishers, Paste Wax

Woodworking Unlimited/Shopsmith
800-543-7586
Paste Wax, Scrapers & Burnisher

The Woodworkers' Store
800-279-4441
Quilt Rack & Bookcase Hardware, Galley Spindles, Dowels, Paste Wax, General Finishes, Scrapers & Burnishers

Woodworker's Supply
800-645-9292
Galley Spindles, Dowels, Paste Wax, Scrapers & Burnishers

Final Details

Quilt Rack

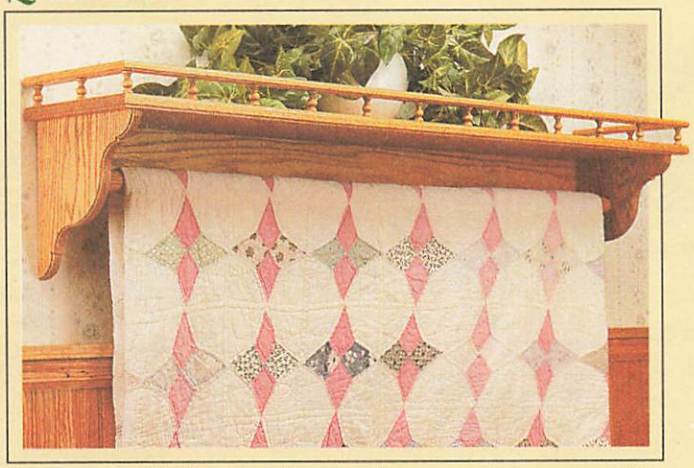

▲ *A removable dowel rod makes it easy to hang up or take down a quilt. The shelf above the dowel features a decorative galley rail. To build the project, see the article on page 6.*

Through Mortise Jig

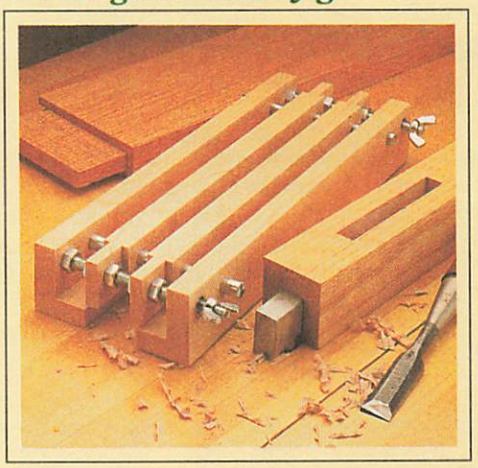

▲ *Through mortise and tenon joints must fit perfectly. That's the job of this shop-made jig, see the article beginning on page 10.*

Craftsman Bookcase

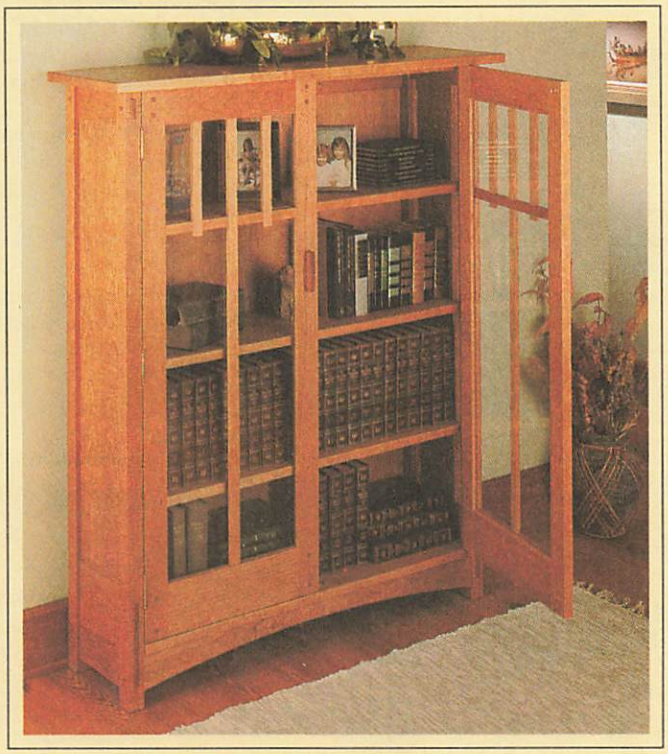

▲ *The doors on this Craftsman-style Bookcase are easy to make — the partitions are applied on top of a single piece of glass. Step-by-step instructions for the project begin on page 20.*

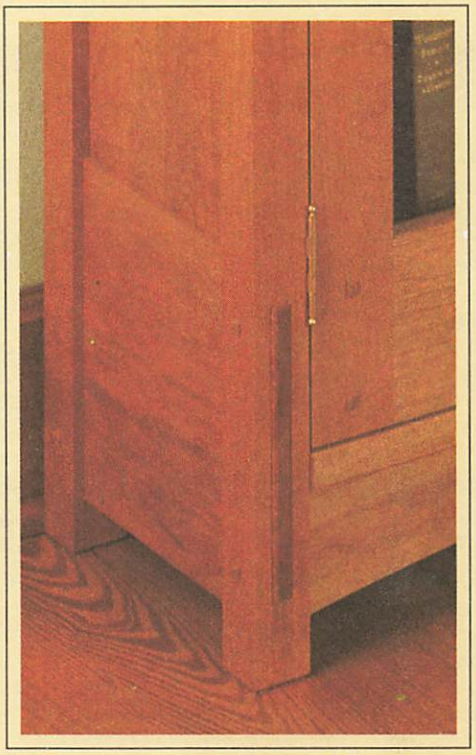

▲ *Fine details, such as chamfered through tenons and pegs, add an authentic decorative touch to the Bookcase. (See page 13.)*